Docusign Envelope ID: EDBAE891-D46B-86FD-81A1-55ED8EA9BEEE

04/23/24

TIP PROJECT: BP9-R002

CONTRACT: DI00384

See Sheet 1A For Index of Sheets
See Sheet 1B For Conventional Plan Sheet Symbols

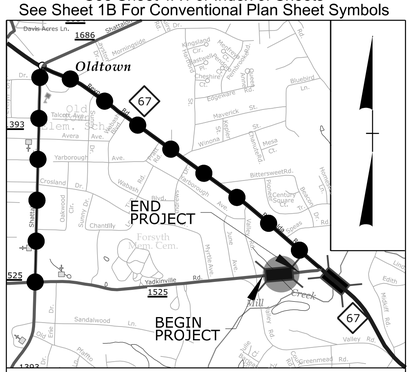

OFFSITE DETOUR ROUTE

VICINITY MAP (NTS)

STATE OF NORTH CAROLINA
DIVISION OF HIGHWAYS

FORSYTH COUNTY

LOCATION: *BRIDGE NO. 330261 ON SR 1525 (YADKINVILLE RD) OVER UT TO MILL CREEK*

TYPE OF WORK: *GRADING, PAVING, DRAINAGE, AND STRUCTURE*

STATE	STATE PROJECT REFERENCE NO.	SHEET NO.	TOTAL SHEETS
N.C.	BP9-R002	1	

STATE PROJ. NO.	F. A. PROJ. NO.	DESCRIPTION
BP9.R002.1		PE
BP9.R002.2		UTILITY & R/W
BP9.R002.3		CONSTRUCTION

FINAL
PLAN SET

NAD 83
NA 2011

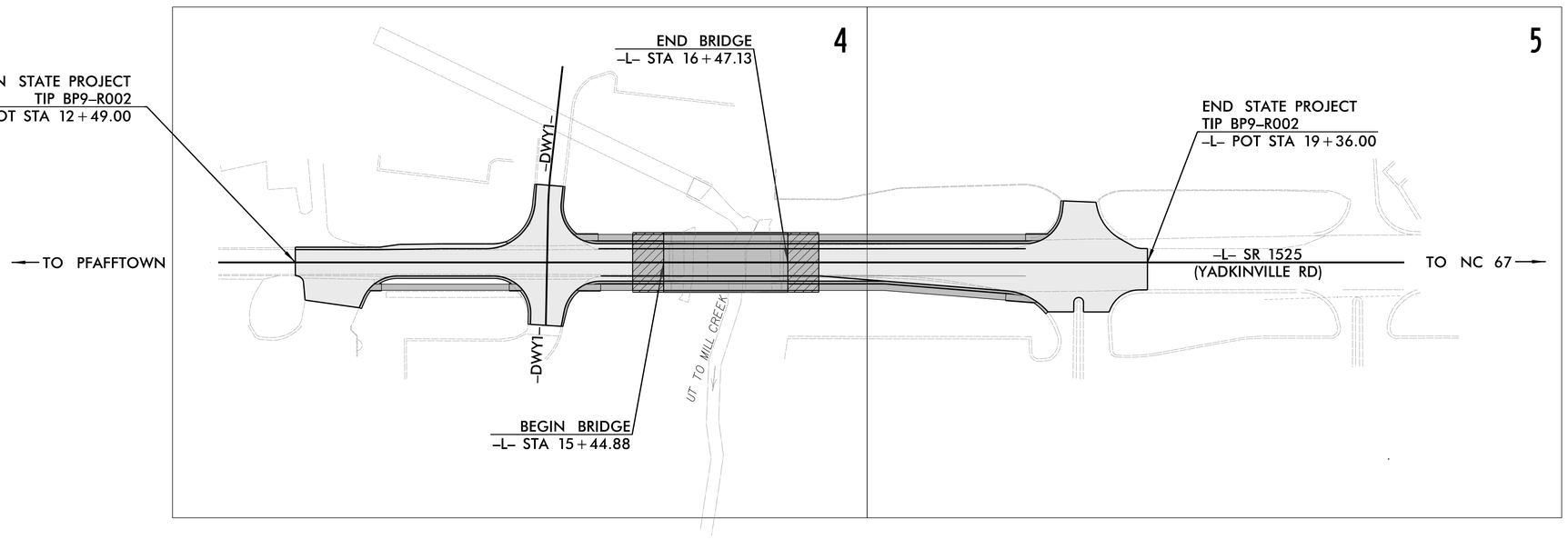

THIS IS A NON CONTROLLED ACCESS FACILITY.
THIS PROJECT IS WITHIN THE MUNICIPAL BOUNDARIES OF WINSTON–SALEM.

DOCUMENT NOT CONSIDERED FINAL UNLESS ALL SIGNATURES COMPLETED

GRAPHIC SCALES

20 10 0 20 40
PLANS

20 10 0 20 40
PROFILE (HORIZONTAL)

10 5 0 10 20
PROFILE (VERTICAL)

DESIGN DATA

ADT 2026 = 14,175
ADT 2046 = 24,675
K = N/A %
D = N/A %
T = 7 % *
V = 50 MPH
* TTST =3 DUAL =4
FUNC CLASS =
MAJOR COLLECTOR
REGIONAL TIER

PROJECT LENGTH

LENGTH OF ROADWAY TIP PROJECT BP9-R002 = 0.111 MILE
LENGTH OF STRUCTURE TIP PROJECT BP9-R002 = 0.019 MILE
TOTAL LENGTH OF TIP PROJECT BP9-R002 = 0.130 MILE

STV Engineers, Inc.
2151 Hawkins Street, Suite 1400
Charlotte, NC 28203
NC License Number F–0991

2024 STANDARD SPECIFICATIONS

RIGHT OF WAY DATE:
MARCH 6, 2025

LETTING DATE:
AUGUST 26, 2026

MORGAN STAHL, P.E
PROJECT ENGINEER

CARLOS OWENS
ROADWAY DESIGNER

JEREMY KEATON, P.E. PLS
NCDOT CONTACT

HYDRAULICS ENGINEER

Signed by: Harminder Singh P.E. 7/1/2026
SIGNATURE: DATE

NORTH CAROLINA PROFESSIONAL SEAL 044561 ENGINEER HARMINDER SINGH

ROADWAY DESIGN ENGINEER

Signed by: Morgan Stahl P.E. 7/1/2026
SIGNATURE: DATE

NORTH CAROLINA PROFESSIONAL SEAL 054248 ENGINEER MORGAN A. STAHL

STATE OF NORTH CAROLINA DEPARTMENT OF TRANSPORTATION

STVGROUP/StahlM - 6/30/2026

INDEX OF SHEETS

SHEET NUMBER	SHEET
1	TITLE SHEET
1A	INDEX OF SHEETS, GENERAL NOTES, AND STANDARD DRAWINGS
1B	CONVENTIONAL SYMBOLS
2A-1 THRU 2A-2	PAVEMENT SCHEDULE AND TYPICAL SECTIONS
3B-1 THRU 3B-2	SUMMARY SHEETS (EARTHWORK, PAVEMENT REMOVAL, GUARDRAIL)
3D-1	DRAINAGE SUMMARY SHEET
3G-1	GEOTECHNICAL SUMMARIES SHEET
3P-1	PARCEL INDEX SHEET
4 THRU 7	PLAN AND PROFILE SHEETS
RW-1 THRU RW-5	RIGHT-OF-WAY PLANS
TMP-1 THRU TMP-5	TRAFFIC MANAGEMENT PLANS
PMP-1 THRU PMP-2	PAVEMENT MARKING PLANS
EC-1 THRU EC-7	EROSION CONTROL PLANS
UO-1 THRU UO-5	UTILITY BY OTHERS PLANS
X-1A	CROSS SECTION INDEX OF SHEET
X-1B	CROSS SECTION SUMMARY SHEET
X-1 THRU X-10	CROSS SECTIONS
S-1 THRU S-21	STRUCTURE PLANS

GENERAL NOTES

GENERAL NOTES: 2024 SPECIFICATIONS EFFECTIVE: 01-16-2024

GRADE LINE:
GRADING AND SURFACING:

THE GRADE LINES SHOWN DENOTE THE FINISHED ELEVATION OF THE PROPOSED SURFACING AT GRADE POINTS SHOWN ON THE TYPICAL SECTIONS. GRADE LINES MAY BE ADJUSTED AT THEIR BEGINNING AND ENDING AND AT STRUCTURES AS DIRECTED BY THE ENGINEER IN ORDER TO SECURE A PROPER TIE-IN.

CLEARING:

CLEARING ON THIS PROJECT SHALL BE PERFORMED TO THE LIMITS ESTABLISHED BY METHOD III.

SIDE ROADS:

THE CONTRACTOR WILL BE REQUIRED TO DO ALL NECESSARY WORK TO PROVIDE SUITABLE CONNECTIONS WITH ALL ROADS, STREETS, AND DRIVES ENTERING THIS PROJECT. THIS WORK WILL BE PAID FOR AT THE CONTRACT UNIT PRICE FOR THE PARTICULAR ITEMS INVOLVED.

SUBSURFACE DRAINS:

SUBSURFACE DRAINS SHALL BE CONSTRUCTED IN ACCORDANCE WITH STD. NO. 815.02 AT LOCATIONS DIRECTED BY THE ENGINEER.

DRIVEWAYS:

DRIVEWAYS SHALL BE CONSTRUCTED IN ACCORDANCE WITH STD. 848.02 USING 3' RADII OR RADII AS SHOWN ON THE PLANS. LOCATIONS OF DRIVES WILL BE AS SHOWN ON THE PLANS OR AS DIRECTED BY THE ENGINEER.

STREET TURNOUT:

STREET RETURNS SHALL BE CONSTRUCTED IN ACCORDANCE WITH STD. NO. 848.04 USING THE RADII NOTED ON PLANS.

GUARDRAIL:

THE GUARDRAIL LOCATIONS SHOWN ON THE PLANS MAY BE ADJUSTED DURING CONSTRUCTION AS DIRECTED BY THE ENGINEER. THE CONTRACTOR SHOULD CONSULT WITH THE ENGINEER PRIOR TO ORDERING GUARDRAIL MATERIAL.

END BENTS:

THE ENGINEER SHALL CHECK THE STRUCTURE END BENT PLANS, DETAILS, AND CROSS-SECTION PRIOR TO SETTING OF THE SLOPE STAKES FOR THE EMBANKMENT OR EXCAVATION APPROACHING A BRIDGE.

UTILITIES:

UTILITY OWNERS ON THIS PROJECT ARE:
COMMUNICATIONS - SEGRA, VERIZON/ MCI, WINDSTREAM, LUMOS
POWER - DUKE ENERGY
WATER - CITY OF WINSTON SALEM

RIGHT-OF-WAY MARKERS:

ALL RIGHT-OF-WAY MARKERS ON THIS PROJECT SHALL BE PLACED BY CONTRACT.

CURB RAMPS

CURB RAMPS ARE SHOWN ON THE PLANS AT APPROXIMATE LOCATIONS.
CONSTRUCT ALL CURB RAMPS ACCORDANCE WITH STD 848.06.

STANDARD DRAWINGS

2024 ROADWAY ENGLISH STANDARD DRAWINGS

The following Roadway Standards as appear in "Roadway Standard Drawings" Contracts Standards and Development Unit - N. C. Department of Transportation - Raleigh, N. C., Dated January 16, 2024 are applicable to this project and by reference hereby are considered a part of these plans:

STD.NO. TITLE

DIVISION 2 - EARTHWORK

200.03 Method of Clearing - Method III
225.02 Guide for Grading Subgrade - Secondary and Local
225.04 Method of Obtaining Superelevation - Two Lane Pavement

DIVISION 3 - PIPE CULVERTS

300.01 Method of Pipe Installation (Use Details in Lieu of Standards for Sheets 1 and 2 of 2)

DIVISION 4 - MAJOR STRUCTURES
423.01 Bridge Approach Fills - Type 1 Approach Fill for Bridge Abutment

DIVISION 5 - SUBGRADE, BASES AND SHOULDERS

560.01 Method of Shoulder Construction - High Side of Superelevated Curve - Method I

DIVISION 8 - INCIDENTALS

815.02 Subsurface Drain
840.02 Concrete Catch Basin - 12" thru 54" Pipe
840.03 Frame, Grates, and Hood - for Use on Standard Catch Basin
840.17 Concrete Grated Drop Inlet Type 'A' - 12' thru 72' Pipe
840.18 Concrete Grated Drop Inlet Type -B' - 12' thru 36' Pipe
840.24 Frame and Narrow Slot Sag Grates
840.31 Concrete Junction Box - 12" thru 66" Pipe
840.35 Traffic Bearing Grated Drop Inlet - for Cast Iron Double Frame and Grates
840.45 Precast Drainage Structure
840.46 Traffic Bearing Precast Drainage Structure
840.54 Manhole Frame and Cover
840.66 Drainage Structure Steps
840.72 Pipe Collar
846.01 Concrete Curb, Gutter and Curb & Gutter
848.02 Driveway Turnout - Radius Type
848.06 Curb Ramp
862.01 Guardrail Placement
862.02 Guardrail Installation
862.03 Structure Anchor Units
876.01 Rip Rap in Channels and Ditches
876.02 Guide for Rip Rap at Pipe Outlets
876.04 Drainage Ditches with Class 'B' Rip Rap

Docusign Envelope ID: EDBAE891-D46B-86FD-81A1-55ED8EA9BEEE

Note: Not to Scale

STATE OF NORTH CAROLINA, DIVISION OF HIGHWAYS

CONVENTIONAL PLAN SHEET SYMBOLS

BOUNDARIES AND PROPERTY:

- State Line
- County Line
- Township Line
- City Line
- Reservation Line
- Property Line
- Existing Iron Pin (EIP)
- Computed Property Corner
- Existing Concrete Monument (ECM)
- Parcel / Sequence Number
- Existing Fence Line
- Proposed Woven Wire Fence
- Proposed Chain Link Fence
- Proposed Barbed Wire Fence
- Existing Wetland Boundary
- Proposed Wetland Boundary
- Existing Endangered Animal Boundary
- Existing Endangered Plant Boundary
- Existing Historic Property Boundary
- Known Contamination Area: Soil
- Potential Contamination Area: Soil
- Known Contamination Area: Water
- Potential Contamination Area: Water
- Contaminated Site: Known or Potential

BUILDINGS AND OTHER CULTURE:

- Gas Pump Vent or U/G Tank Cap
- Sign
- Well
- Small Mine
- Foundation
- Area Outline
- Cemetery
- Building
- School
- Church
- Dam

HYDROLOGY:

- Stream or Body of Water
- Hydro, Pool or Reservoir
- Jurisdictional Stream
- Buffer Zone 1
- Buffer Zone 2
- Flow Arrow
- Disappearing Stream
- Spring
- Wetland
- Proposed Lateral, Tail, Head Ditch
- False Sump

RAILROADS:

- Standard Gauge
- RR Signal Milepost
- Switch
- RR Abandoned
- RR Dismantled

RIGHT OF WAY & PROJECT CONTROL:

- Primary Horiz Control Point
- Primary Horiz and Vert Control Point
- Secondary Horiz and Vert Control Point
- Vertical Benchmark
- Existing Right of Way Monument
- Proposed Right of Way Monument (Rebar and Cap)
- Proposed Right of Way Monument (Concrete)
- Existing Permanent Easement Monument
- Proposed Permanent Easement Monument (Rebar and Cap)
- Existing C/A Monument
- Proposed C/A Monument (Rebar and Cap)
- Proposed C/A Monument (Concrete)
- Existing Right of Way Line
- Proposed Right of Way Line
- Existing Control of Access Line
- Proposed Control of Access Line
- Proposed ROW and CA Line
- Existing Easement Line
- Proposed Temporary Construction Easement
- Proposed Temporary Drainage Easement
- Proposed Permanent Drainage Easement
- Proposed Permanent Drainage/Utility Easement
- Proposed Permanent Utility Easement
- Proposed Temporary Utility Easement
- Proposed Aerial Utility Easement

ROADS AND RELATED FEATURES:

- Existing Edge of Pavement
- Existing Curb
- Proposed Slope Stakes Cut
- Proposed Slope Stakes Fill
- Proposed Curb Ramp
- Existing Metal Guardrail
- Proposed Guardrail
- Existing Cable Guiderail
- Proposed Cable Guiderail
- Equality Symbol
- Pavement Removal

VEGETATION:

- Single Tree
- Single Shrub
- Hedge
- Woods Line
- Orchard
- Vineyard

EXISTING STRUCTURES:

MAJOR:

- Bridge, Tunnel or Box Culvert
- Bridge Wing Wall, Head Wall and End Wall

MINOR:

- Head and End Wall
- Pipe Culvert
- Footbridge
- Drainage Box: Catch Basin, DI or JB
- Paved Ditch Gutter
- Storm Sewer Manhole
- Storm Sewer

UTILITIES:

** SUE - Subsurface Utility Engineering*
LOS - Level of Service - A,B,C or D (Accuracy)

POWER:

- Existing Power Pole
- Proposed Power Pole
- Existing Joint Use Pole
- Proposed Joint Use Pole
- Power Manhole
- Power Line Tower
- Power Transformer
- U/G Power Cable Hand Hole
- H-Frame Pole
- U/G Power Line Test Hole (SUE - LOS A)*
- U/G Power Line (SUE - LOS B)*
- U/G Power Line (SUE - LOS C)*
- U/G Power Line (SUE - LOS D)*

TELEPHONE:

- Existing Telephone Pole
- Proposed Telephone Pole
- Telephone Manhole
- Telephone Pedestal
- Telephone Cell Tower
- U/G Telephone Cable Hand Hole
- U/G Telephone Test Hole (SUE - LOS A)*
- U/G Telephone Cable (SUE - LOS B)*
- U/G Telephone Cable (SUE - LOS C)*
- U/G Telephone Cable (SUE - LOS D)*
- U/G Telephone Conduit (SUE - LOS B)*
- U/G Telephone Conduit (SUE - LOS C)*
- U/G Telephone Conduit (SUE - LOS D)*
- U/G Fiber Optics Cable (SUE - LOS B)*
- U/G Fiber Optics Cable (SUE - LOS C)*
- U/G Fiber Optics Cable (SUE - LOS D)*

WATER:

- Water Manhole
- Water Meter
- Water Valve
- Water Hydrant
- U/G Water Line Test Hole (SUE - LOS A)*
- U/G Water Line (SUE - LOS B)*
- U/G Water Line (SUE - LOS C)*
- U/G Water Line (SUE - LOS D)*
- Above Ground Water Line

TV:

- TV Pedestal
- TV Tower
- U/G TV Cable Hand Hole
- U/G TV Test Hole (SUE - LOS A)*
- U/G TV Cable (SUE - LOS B)*
- U/G TV Cable (SUE - LOS C)*
- U/G TV Cable (SUE - LOS D)*
- U/G Fiber Optic Cable (SUE - LOS B)*
- U/G Fiber Optic Cable (SUE - LOS C)*
- U/G Fiber Optic Cable (SUE - LOS D)*

GAS:

- Gas Valve
- Gas Meter
- U/G Gas Line Test Hole (SUE - LOS A)*
- U/G Gas Line (SUE - LOS B)*
- U/G Gas Line (SUE - LOS C)*
- U/G Gas Line (SUE - LOS D)*
- Above Ground Gas Line

SANITARY SEWER:

- Sanitary Sewer Manhole
- Sanitary Sewer Cleanout
- U/G Sanitary Sewer Line
- Above Ground Sanitary Sewer
- SS Force Main Line Test Hole (SUE - LOS A)*
- SS Force Main Line (SUE - LOS B)*
- SS Force Main Line (SUE - LOS C)*
- SS Force Main Line (SUE - LOS D)*

MISCELLANEOUS:

- Utility Pole
- Utility Pole with Base
- Utility Located Object
- Utility Traffic Signal Box
- Utility Unknown U/G Line (SUE - LOS B)*
- U/G Tank; Water, Gas, Oil
- Underground Storage Tank, Approx. Loc.
- A/G Tank; Water, Gas, Oil
- Geoenvironmental Boring
- Abandoned According to Utility Records — AATUR
- End of Information — E.O.I.

Docusign Envelope ID: EDBAE891-D46B-86FD-81A1-55ED8EA9BEEE

5/26/20

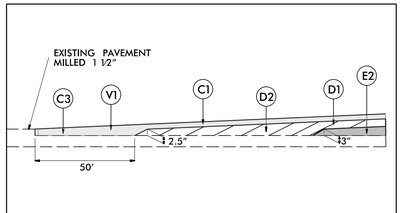

MILLING DETAIL FOR PROFILE CONNECTIONS
TYING PROPOSED PAVEMENTS TO EXISTING PAVEMENTS

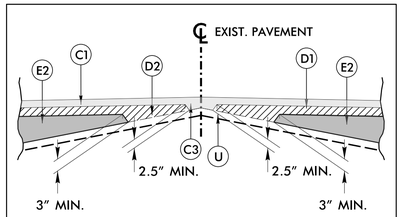

WEDGING DETAIL

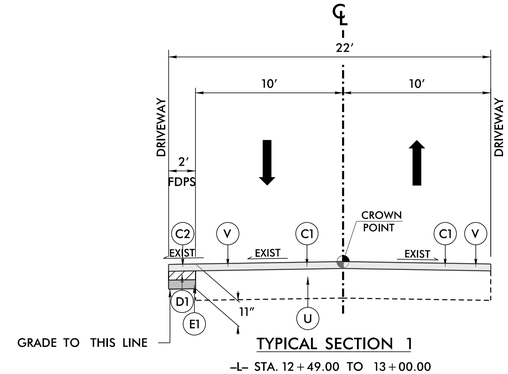

TYPICAL SECTION 1

-L- STA. 12+49.00 TO 13+00.00

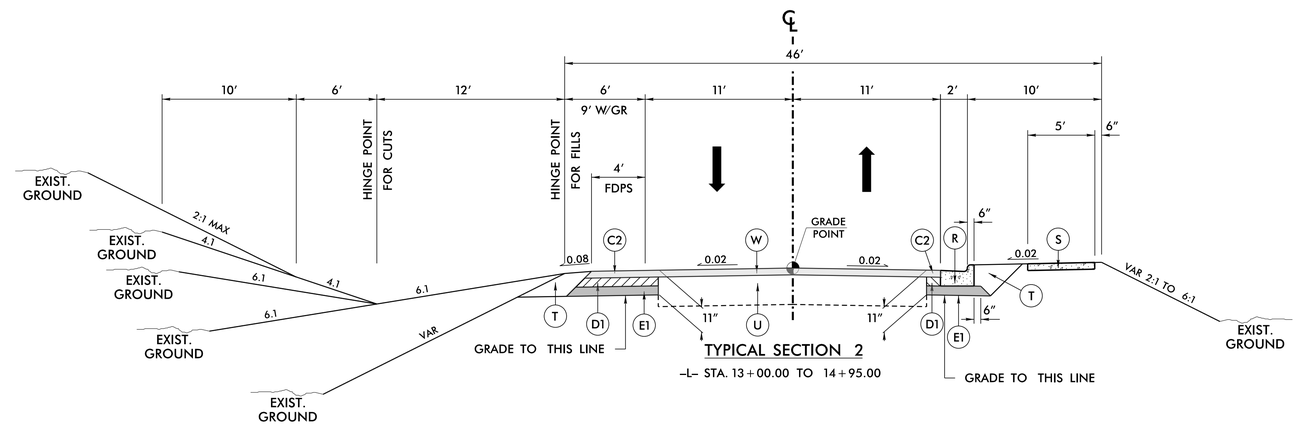

TYPICAL SECTION 2

-L- STA. 13+00.00 TO 14+95.00

	FINAL PAVEMENT SCHEDULE ASSUMED 05/06/2026
A1	PROP. VAR. DEPTH REINFORCED CONCRETE WEARING SURFACE
C1	PROP. APPROX. 1.5" ASPHALT CONCRETE SURFACE COURSE, TYPE S9.5C, AT AN AVERAGE RATE OF 168 LBS. PER SQ. YD.
C2	PROP. APPROX. 3" ASPHALT CONCRETE SURFACE COURSE, TYPE S9.5C, AT AN AVERAGE RATE OF 168 LBS. PER SQ. YD. IN EACH OF TWO LAYERS.
C3	PROP. VAR. DEPTH ASPHALT CONCRETE SURFACE COURSE, TYPE S9.5C, AT AN AVERAGE RATE OF 112 LBS. PER SQ. YD. PER 1" DEPTH. TO BE PLACED IN LAYERS NOT LESS THAN 1.5" IN DEPTH OR GREATER THAN 2" IN DEPTH.
D1	PROP. APPROX. 4" ASPHALT CONCRETE INTERMEDIATE COURSE,TYPE I19.0C, AT AN AVERAGE RATE OF 456 LBS. PER SQ. YD.
D2	PROP. VAR. DEPTH ASPHALT CONCRETE INTERMEDIATE COURSE,TYPE I19.0C, AT AN AVERAGE RATE OF 114 LBS. PER SQ. YD. PER 1" DEPTH. TO BE PLACED IN LAYERS NOT LESS THAN 2.5" IN DEPTH OR GREATER THAN 4" IN DEPTH.
E1	PROP. APPROX. 4" ASPHALT CONCRETE BASE COURSE, TYPE B25.0C, AT AN AVERAGE RATE OF 456 LBS. PER SQ. YD.
E2	PROP. VAR. DEPTH ASPHALT CONCRETE BASE COURSE, TYPE B25.0C, AT AN AVERAGE RATE OF 114 LBS. PER SQ. YD. PER 1" DEPTH. TO BE PLACED IN LAYERS NOT LESS THAN 3.0" IN DEPTH OR GREATER THAN 5.5" IN DEPTH.
R	2'-6" CONCRETE CURB AND GUTTER
S	4" CONCRETE SIDEWALK
T	EARTH MATERIAL
V	MILLING 1.5"
V1	INCIDENTIAL MILLING 0" TO 1.5"
U	EXISTING PAVEMENT
W	PAVEMENT WEDGING

ALL PAVEMENT SLOPES ARE 1:1 UNLESS SHOWN OTHERWISE.

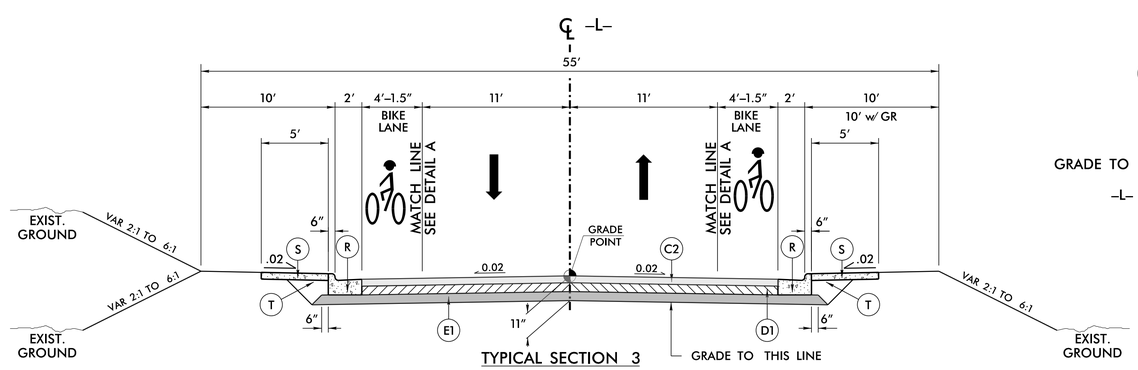

TYPICAL SECTION 3

-L- STA. 14+95.00 TO 15+21.00 (BEGIN CONC. APPROACH)

SEE STRUCTURE PLANS FOR BRIDGE APPROACH DETAILS

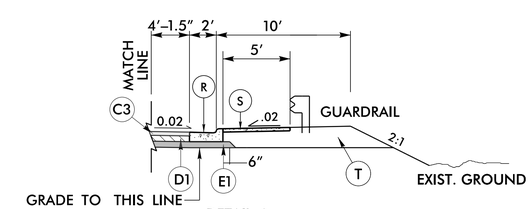

DETAIL A

-L- STA. 14+74.15 TO 15+21.00 (LT & RT)

REVISIONS

BP9-R002

2A-1

NORTH CAROLINA
DEPARTMENT OF TRANSPORTATION
FORSYTH COUNTY

ROADWAY DESIGN UNIT

ROADWAY DESIGN ENGINEER

NORTH CAROLINA PROFESSIONAL SEAL 054248 ENGINEER MORGAN A. STAHL

Signed by:
Morgan Stahl
CCB59BA914974AD...
7/1/2026

PREPARED BY

STV Engineers, Inc.
2101 Hawkins Street, Suite 1400
Charlotte, NC 28203
NC License Number F-0991

DOCUMENT NOT CONSIDERED FINAL UNLESS ALL SIGNATURES COMPLETED

Docusign Envelope ID: EDBAE891-D46B-86FD-81A1-55ED8EA9BEEE

5/26/20

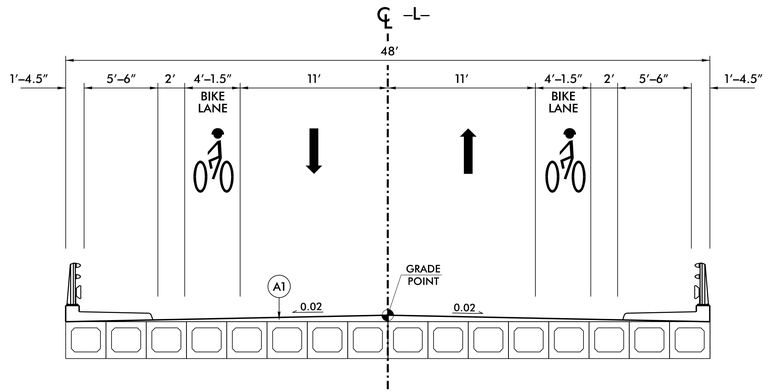

TYPICAL SECTION 4

–L– STA. 15+44.88 (BEGIN BRIDGE) TO 16+47.13 (END BRIDGE)

SEE STRUCTURE PLANS FOR STRUCTURE CONSTRUCTION DETAILS

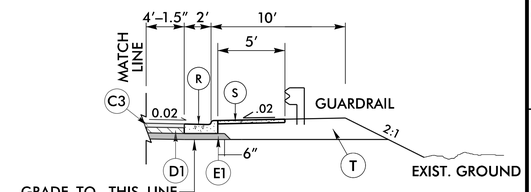

DETAIL A

–L– STA. 16+71.06 TO 17+79.30 (LT & RT)

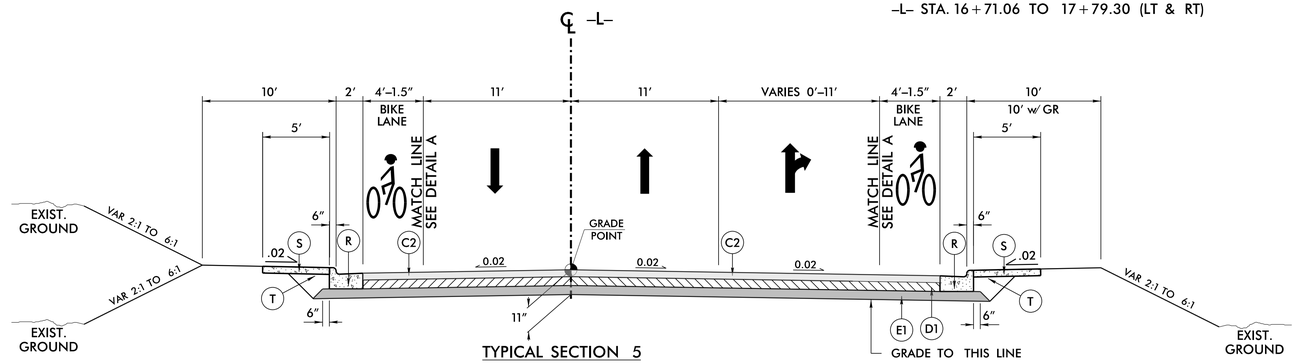

TYPICAL SECTION 5

–L– STA. 16+71.00 (END CONC. APPROACH) TO 16+95.51

SEE STRUCTURE PLANS FOR BRIDGE APPROACH DETAILS

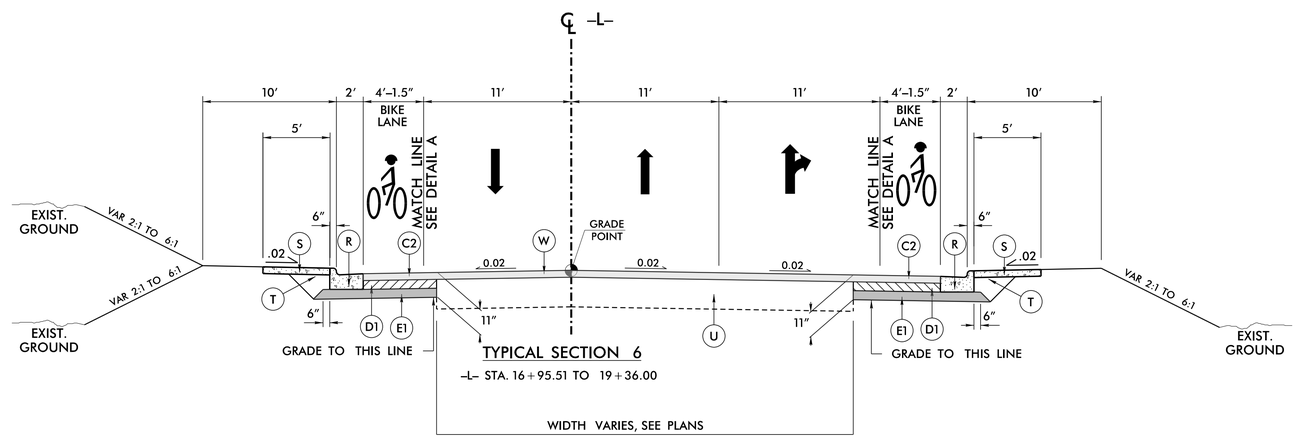

TYPICAL SECTION 6

–L– STA. 16+95.51 TO 19+36.00

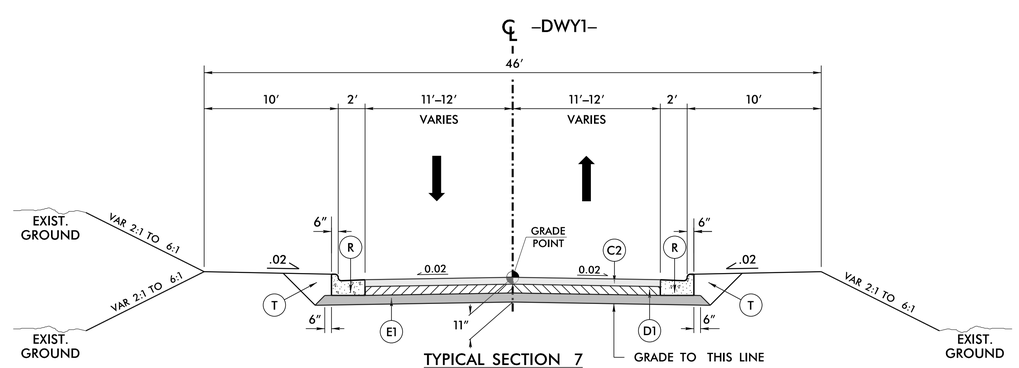

TYPICAL SECTION 7

–DWY1– STA. 10+69.26 TO 11+43.38
–DWY1– STA. 11+74.38 TO 12+09.61

	FINAL PAVEMENT SCHEDULE ASSUMED 05/06/2026
A1	PROP. VAR. DEPTH REINFORCED CONCRETE WEARING SURFACE
C1	PROP. APPROX. 1.5″ ASPHALT CONCRETE SURFACE COURSE, TYPE S9.5C, AT AN AVERAGE RATE OF 168 LBS. PER SQ. YD.
C2	PROP. APPROX. 3″ ASPHALT CONCRETE SURFACE COURSE, TYPE S9.5C, AT AN AVERAGE RATE OF 168 LBS. PER SQ. YD. IN EACH OF TWO LAYERS.
C3	PROP. VAR. DEPTH ASPHALT CONCRETE SURFACE COURSE, TYPE S9.5C, AT AN AVERAGE RATE OF 112 LBS. PER SQ. YD. PER 1″ DEPTH. TO BE PLACED IN LAYERS NOT LESS THAN 1.5″ IN DEPTH OR GREATER THAN 2″ IN DEPTH.
D1	PROP. APPROX. 4″ ASPHALT CONCRETE INTERMEDIATE COURSE,TYPE I19.0C, AT AN AVERAGE RATE OF 456 LBS. PER SQ. YD.
D2	PROP. VAR. DEPTH ASPHALT CONCRETE INTERMEDIATE COURSE,TYPE I19.0C, AT AN AVERAGE RATE OF 114 LBS. PER SQ. YD. PER 1″ DEPTH. TO BE PLACED IN LAYERS NOT LESS THAN 2.5″ IN DEPTH OR GREATER THAN 4″ IN DEPTH.
E1	PROP. APPROX. 4″ ASPHALT CONCRETE BASE COURSE, TYPE B25.0C, AT AN AVERAGE RATE OF 456 LBS. PER SQ. YD.
E2	PROP. VAR. DEPTH ASPHALT CONCRETE BASE COURSE, TYPE B25.0C, AT AN AVERAGE RATE OF 114 LBS. PER SQ. YD. PER 1″ DEPTH. TO BE PLACED IN LAYERS NOT LESS THAN 3.0″ IN DEPTH OR GREATER THAN 5.5″ IN DEPTH.
R	2′-6″ CONCRETE CURB AND GUTTER
S	4″ CONCRETE SIDEWALK
T	EARTH MATERIAL
V	MILLING 1.5″
V1	INCIDENTIAL MILLING 0″ TO 1.5″
U	EXISTING PAVEMENT
W	PAVEMENT WEDGING

ALL PAVEMENT SLOPES ARE 1:1 UNLESS SHOWN OTHERWISE.

BP9-R002

2A-2

NORTH CAROLINA
DEPARTMENT OF TRANSPORTATION
FORSYTH COUNTY

ROADWAY DESIGN UNIT

ROADWAY DESIGN ENGINEER

NORTH CAROLINA PROFESSIONAL SEAL 054248 ENGINEER MORGAN A. STAHL

Signature: Morgan Stahl
CCB50BAB91497A4D...
7/1/2026

PREPARED BY

STV Engineers, Inc.
2101 Hawkins Street, Suite 1400
Charlotte, NC 28203
NC License Number F-0991

DOCUMENT NOT CONSIDERED FINAL UNLESS ALL SIGNATURES COMPLETED

REVISIONS

Docusign Envelope ID: EDBAE891-D46B-86FD-81A1-55ED8EA9BEEE

5/26/20

DIVISION OF HIGHWAYS
STATE OF NORTH CAROLINA

EARTHWORK SUMMARY (IN CUBIC YARDS)

CHAIN	FROM STATION	TO STATION	SIDE	UNCL. EXCAVATION	UNDERCUT	EMBT + %	BORROW	WASTE
–L–	13 + 35.00	15 + 44.88 (BR)	LT & RT	88		206	118	
–L–	16 + 47.13 (BR)	19 + 36.00	LT & RT	48		888	840	
TOTAL				136		1094	958	
MATERIAL FOR SHOULDER CONSTRUCTION						6	6	
LOSS DUE TO CLEARING AND GRUBBING								
PROJECT TOTAL				136		1100	964	
ESTIMATE 5% FOR TOPSOIL ON BORROW PITS							48	
GRAND TOTAL				136			1012	
SAY				140			1015	

DDE = 80 CY

PER GEOTECH RECOMMENDATION, ESTIMATED 450 CUBIC YARDS OF UNDERCUT TO BE USED IN THE DISCRETION OF THE RESIDENT ENGINEER.

NOTE: Approximate quantities only. Unclassified Excavation, Borrow Excavation, Removal of Existing Asphalt Pavement, and Fine Grading will be paid for at the contract lump sum price for "Grading."

ASPHALT PAVEMENT REMOVAL SUMMARY

CHAIN	FROM STATION	TO STATION	SIDE	SQ. YD.
–L–	15 + 21.00	15 + 50.61 (BR)	LT & RT	67.27
–L–	16 + 42.44 (BR)	16 + 71.00	LT & RT	65.41
–DWY1–	10 + 96.26	11 + 43.38	LT & RT	171.09
–DWY1–	11 + 74.38	12 + 09.61	LT & RT	152.89
			TOTAL	456.66
			SAY	460

BP9-R002

03B-1

NORTH CAROLINA
DEPARTMENT OF TRANSPORTATION
FORSYTH COUNTY

ROADWAY DESIGN UNIT

PREPARED BY

STV Engineers, Inc.
2101 Hawkins Street, Suite 1400
Charlotte, NC 28203
NC License Number F-0991

DOCUMENT NOT CONSIDERED FINAL UNLESS ALL SIGNATURES COMPLETED

REVISIONS

Docusign Envelope ID: EDBAE891-D46B-86FD-81A1-55ED8EA9BEEE

5/26/20

GUARDRAIL SUMMARY

SURVEY LINE	BEG. STA.	END STA.	LOCATION	LENGTH			WARRANT POINT		"N" DIST. FROM E.O.L.	TOTAL SHOUL. WIDTH	FLARE LENGTH		W*		ANCHORS									IMPACT ATTENUATOR TYPE 350			SINGLE FACED GUARDRAIL	REMOVE EXISTING GUARDRAIL	REMOVE AND STOCKPILE EXISTING GUARDRAIL	REMARKS
				STRAIGHT	SHOP CURVED	DOUBLE FACED	APPROACH END	TRAILING END			APPROACH END	TRAILING END	APPROACH END	TRAILING END	XI MOD	B-77	GREU TL-3	M-350	TYPE III	CAT-1	VI MOD	BIC	AT-1	EA	G	NG				
-L-	14+74.15	15+44.88 (BR)	LT	37.50	37.50			15+44.88	12.0 - 15.2	N/A									1				1							
-L-	14+74.15	15+44.88 (BR)	RT	37.50	37.50		15+44.88		12.0 - 14.7	N/A									1				1							
-L-	16+47.13 (BR)	18+14.80	LT	168.75			16+47.13		12.0 - 14.7	N/A	50		1				1		1											
-L-	16+47.13 (BR)	17+89.61	RT	143.75				16+47.13	12.0 - 8.8	N/A		50		1			1		1											
			TOTAL:	387.5	75.00												2 EA		4 EA				2 EA							
			TOTAL ANCHOR LENGTH:	187.50																										
			TOTAL GUARDRAIL LENGTH:	200			5 ADDITIONAL GUARDRAIL POSTS																							
			SAY:	200 LF	75 LF																									

* W MEASURED FROM "N" AT THE BEGINNING OF THE ANCHOR TO "N" AT THE END OF THE ANCHOR.
"N" = DISTANCE FROM EDGE OF LANE TO FACE OF GUARDRAIL.
TOTAL SHOULDER WIDTH = DISTANCE FROM EDGE OF TRAVEL LANE TO SHOULDER BREAK POINT.
FLARE LENGTH = DISTANCE FROM LAST SECTION OF PARALLEL GUARDRAIL TO END OF GUARDRAIL.

W = TOTAL WIDTH OF FLARE FROM BEGINNING OF TAPER TO END OF GUARDRAIL.
G = GATING IMPACT ATTENUATOR TYPE 350
NG = NON-GATING IMPACT ATTENUATOR TYPE 350

BP9-R002

03B-2

NORTH CAROLINA
DEPARTMENT OF TRANSPORTATION
FORSYTH COUNTY

ROADWAY DESIGN UNIT

PREPARED BY

STV Engineers, Inc.
2101 Hawkins Street, Suite 1400
Charlotte, NC 28203
NC License Number F-0991

DOCUMENT NOT CONSIDERED FINAL UNLESS ALL SIGNATURES COMPLETED

REVISIONS

Docusign Envelope ID: EDBAE891-D46B-86FD-81A1-55ED8EA9BEEE

5/26/20

LIST OF PIPES, ENDWALLS, ETC. (FOR PIPES 48" & UNDER)

| STATION | LOCATION (LT,RT, OR CL) | STRUCTURE NO. FROM | STRUCTURE NO. TO | TOP ELEVATION | INVERT ELEVATION | INVERT ELEVATION | % MINIMUM REQUIRED SLOPE | DRAINAGE PIPE (RCP, CSP, CAAP, HDPE, PVC, OR PP PIPE) SIZE 12" | 15" | 18" | 24" | 30" | 36" | 42" | 48" | CLASS IV R.C. PIPE SIZE 12" | 15" | 18" | 24" | 30" | 36" | 42" | 48" | CLASS III R.C. PIPE SIZE 12" | 15" | 18" | 24" | 30" | 36" | 42" | 48" | 15" SIDE DRAIN PIPE | 18" SIDE DRAIN PIPE | 24" SIDE DRAIN PIPE | ENDWALLS STD. 838.01, STD. 838.11 OR STD. 838.80 (UNLESS NOTED OTHERWISE) CU. YDS. R.C.P. | C.S.P. | QUANTITIES FOR DRAINAGE STRUCTURES * TOTAL L.F. FOR PAY QUANTITY SHALL BE COL. "A" + (1.3 X COL. "B") LIN. FT. A | B | C.B. STD. 840.01 OR STD. 840.02 | FRAME, GRATES AND HOOD STANDARD 840.03 TYPE OF GRATE E | F | G | | D.I. STD. 840.14 OR STD. 840.15 | D.I. FRAME AND GRATE STD. 840.16 | G.D.I. TYPE "A" STD. 840.17 OR 840.26 | G.D.I. TYPE "B" STD. 840.18 OR 840.27 | G.D.I. TYPE "D" STD. 840.19 OR 840.28 | T.B.D.I. STD. 840.35 | G.D.I. FRAME WITH GRATE STD. 840.20 | G.D.I. FRAME WITH TWO GRATES STD. 840.20 | G.D.I. (N.S.) FRAME WITH GRATE STD. 840.29 | G.D.I. (N.S.) FRAME WITH TWO GRATES STD. 840.24 | J.B. STD. 840.31 OR 840.32 | 15" SIDE DRAIN PIPE ELBOW | CONC. COLLARS CL. "B" C.Y. STD 840.72 | CONC. & BRICK PIPE PLUG, C.Y. STD. 840.71 | PIPE REMOVAL LIN.FT. | REMARKS |
|---|---|---

Docusign Envelope ID: EDBAE891-D46B-86FD-81A1-55ED8EA9BEEE

COMPUTED BY: JEB DATE: 10/2/24
CHECKED BY: SY DATE: 10/2/24

(2-3-23)

STATE OF NORTH CAROLINA
DIVISION OF HIGHWAYS

PROJECT NO.	SHEET NO.
BP9.R002	3G-1

SUMMARY OF SUBSURFACE DRAINAGE

LINE	Station	Station	Location LT/RT/CL	Drain Type* UD/BD/SD	LF
CONTINGENCY				SD	200
				TOTAL LF:	200

*UD = Underdrain
*BD = Blind Drain
*SD = Subsurface Drain

Docusign Envelope ID: EDBAE891-D46B-86FD-81A1-55ED8EA9BEEE

DIVISION OF HIGHWAYS
STATE OF NORTH CAROLINA

PARCEL INDEX SHEET

PARCEL NO.	SHEET NO.	PROPERTY OWNER NAME	AREA TAKEN	
			PDE	TCE
1	4	NEW CHURCH	1634	1550
2	4 & 5	GOODWILL INDUSTRIES OF NORTHWEST NORTH CAROLINA, INC.	367	4163
3	4	JS & C INTERPRISE GROUP, INC.		625

REVISIONS

Docusign Envelope ID: EDBAE891-D46B-86FD-81A1-55ED8EA9BEEE

5/26/20

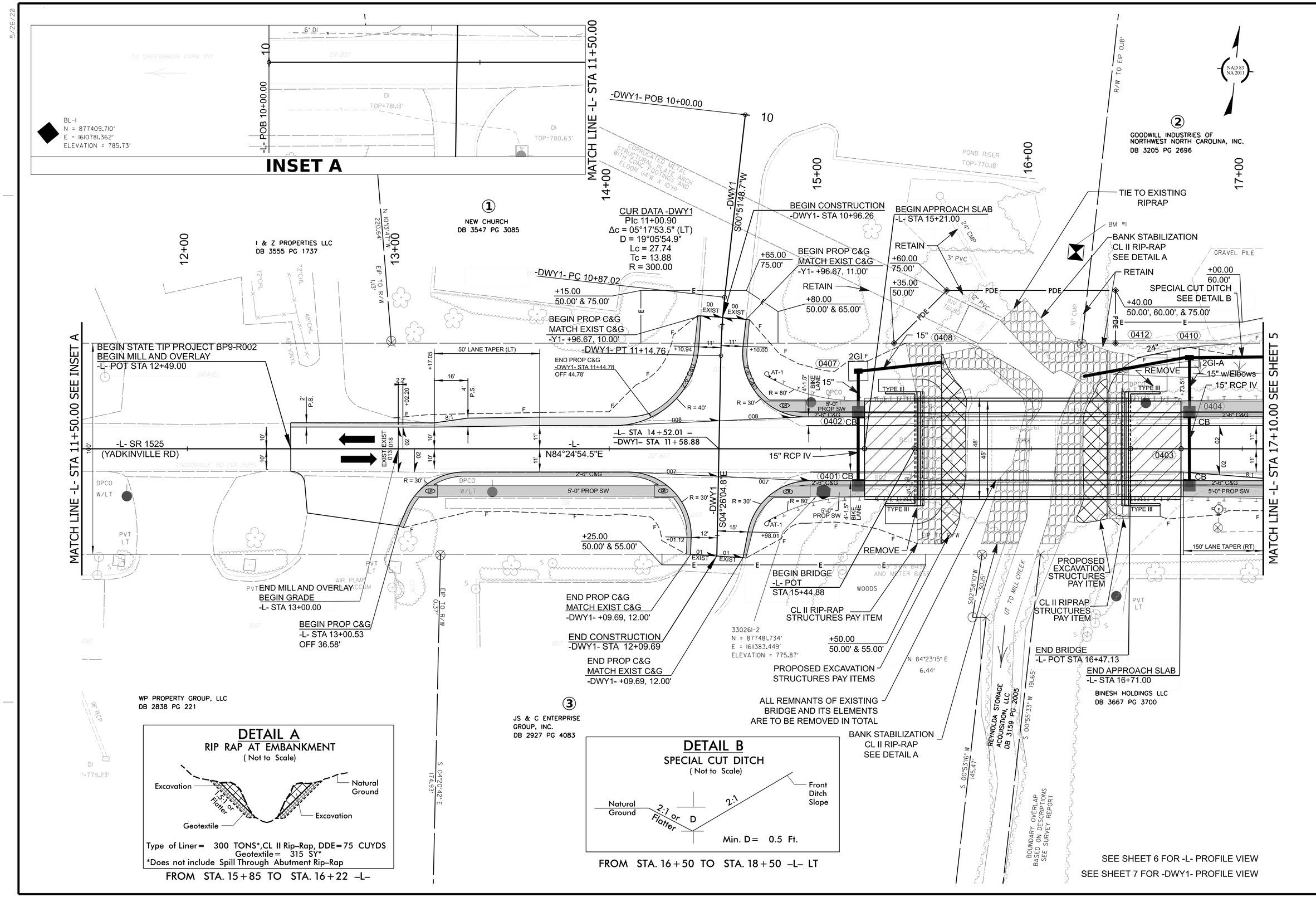

BP9-R002

004

NORTH CAROLINA
DEPARTMENT OF TRANSPORTATION
FORSYTH COUNTY

ROADWAY DESIGN UNIT

ROADWAY DESIGN ENGINEER
NORTH CAROLINA PROFESSIONAL SEAL 054248 ENGINEER MORGAN A. STAHL
Signed by: Morgan Stahl 5/11/2026
CCB59BA914974A0...

HYDRAULICS ENGINEER
NORTH CAROLINA PROFESSIONAL SEAL 044561 ENGINEER HARMINDER SINGH HERMINDER SINGH
Signed by: 5/11/2026
CCB9B9B9B9B9B9B...

PREPARED BY
STV
STV Engineers, Inc.
2101 Hawkins Street, Suite 1400
Charlotte, NC 28203
NC License Number F-0991

DOCUMENT NOT CONSIDERED FINAL UNLESS ALL SIGNATURES COMPLETED

REVISIONS

Docusign Envelope ID: EDBAE891-D46B-86FD-81A1-55ED8EA9BEEE

5/26/20

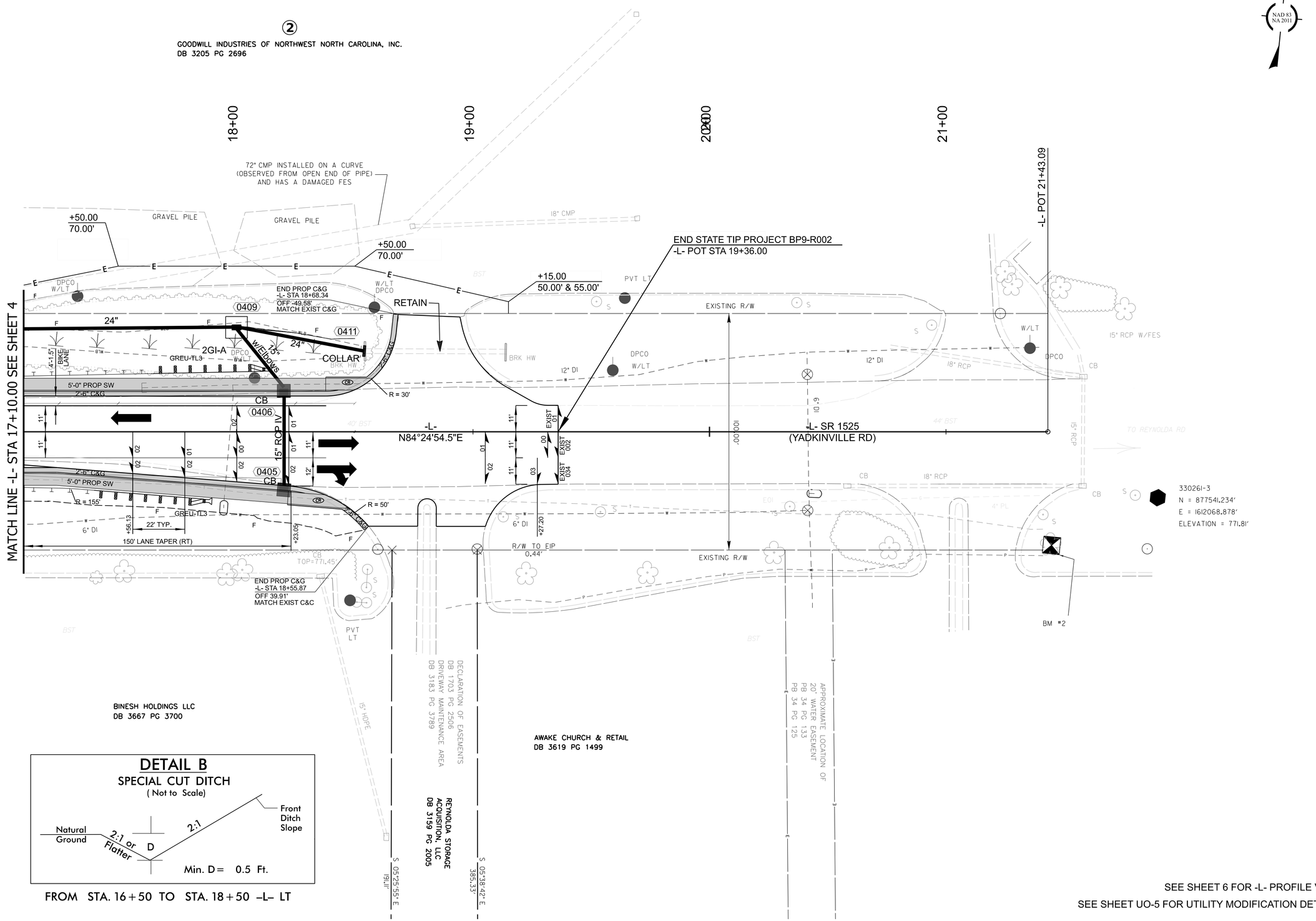

DETAIL B

SPECIAL CUT DITCH

(Not to Scale)

FROM STA. 16+50 TO STA. 18+50 –L– LT

SEE SHEET 6 FOR -L- PROFILE VIEW

SEE SHEET UO-5 FOR UTILITY MODIFICATION DETAILS

BP9-R002

005

NORTH CAROLINA
DEPARTMENT OF TRANSPORTATION
FORSYTH COUNTY

ROADWAY DESIGN UNIT

ROADWAY DESIGN ENGINEER

NORTH CAROLINA PROFESSIONAL SEAL 054248 ENGINEER MORGAN A. STAHL

Signed by:
Morgan Stahl 7/1/2026
CCB5B6A914974AD...

HYDRAULICS ENGINEER

NORTH CAROLINA PROFESSIONAL SEAL 044561 ENGINEER HARMINDER SINGH

Harminder Singh 7/1/2026
D3C0206E57024AE...

PREPARED BY

STV Engineers, Inc.
2101 Hawkins Street, Suite 1400
Charlotte, NC 28203
NC License Number F-0991

DOCUMENT NOT CONSIDERED FINAL UNLESS ALL SIGNATURES COMPLETED

REVISIONS

Docusign Envelope ID: EDBAE891-D46B-86FD-81A1-55ED8EA9BEEE

5/26/20

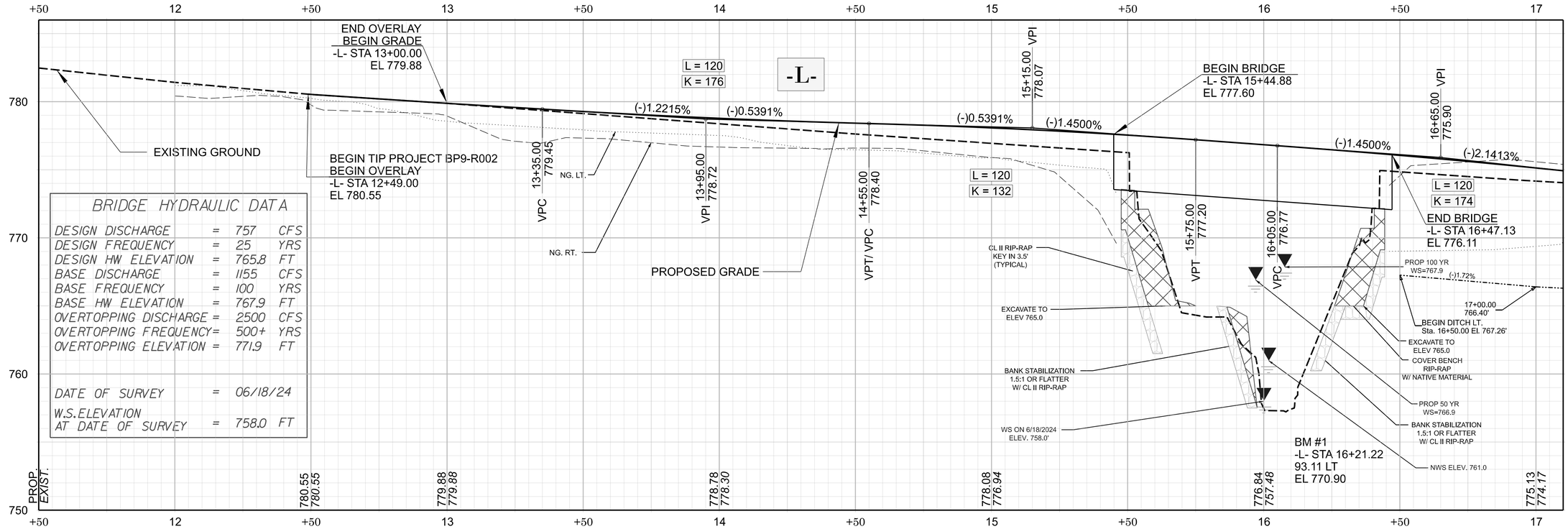

BRIDGE HYDRAULIC DATA			
DESIGN DISCHARGE	=	757	CFS
DESIGN FREQUENCY	=	25	YRS
DESIGN HW ELEVATION	=	765.8	FT
BASE DISCHARGE	=	1155	CFS
BASE FREQUENCY	=	100	YRS
BASE HW ELEVATION	=	767.9	FT
OVERTOPPING DISCHARGE	=	2500	CFS
OVERTOPPING FREQUENCY	=	500+	YRS
OVERTOPPING ELEVATION	=	771.9	FT
DATE OF SURVEY	=	06/18/24	
W.S. ELEVATION AT DATE OF SURVEY	=	758.0	FT

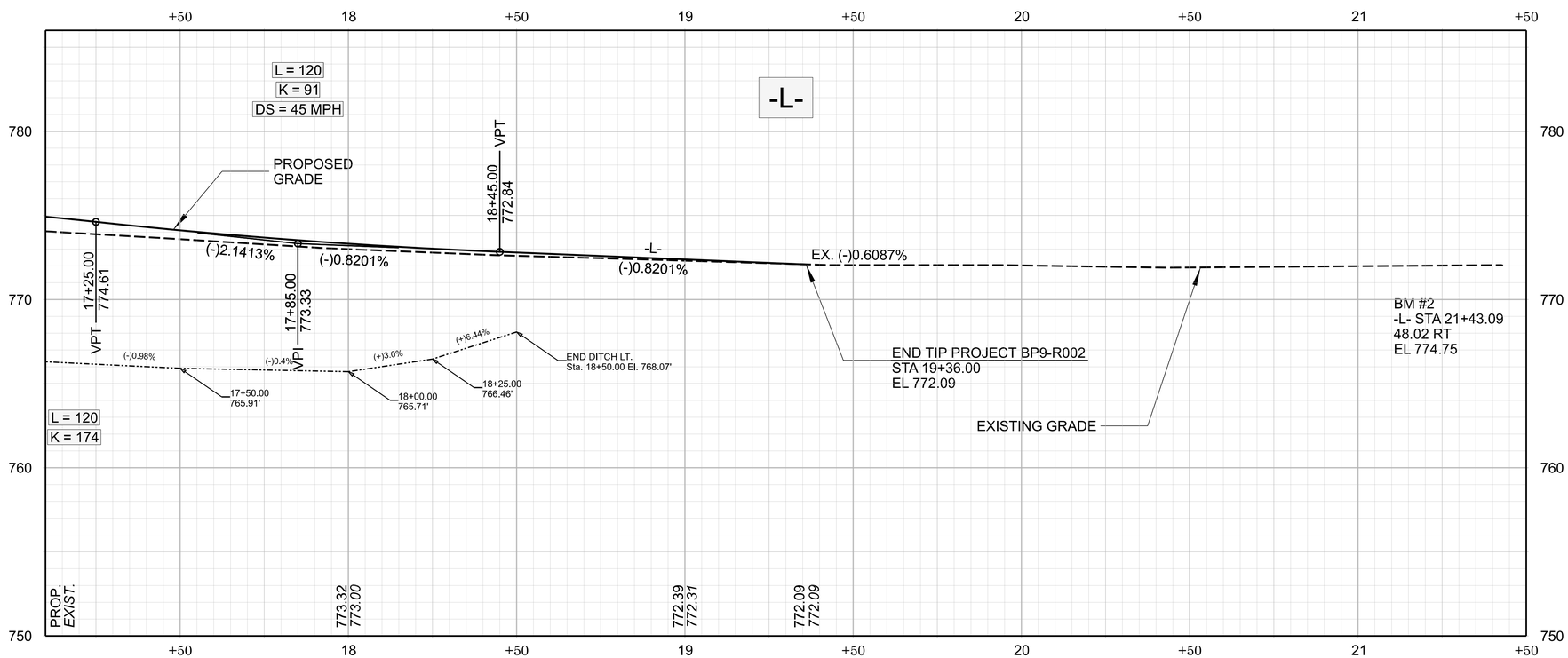

BP9-R002

006

NORTH CAROLINA
DEPARTMENT OF TRANSPORTATION
FORSYTH COUNTY

ROADWAY DESIGN UNIT

ROADWAY DESIGN ENGINEER
NORTH CAROLINA PROFESSIONAL SEAL 054248 ENGINEER MORGAN A. STAHL
Signed by: Morgan Stahl 1/2026
CCB09BA914974AD...

HYDRAULICS ENGINEER
NORTH CAROLINA PROFESSIONAL SEAL 044561 ENGINEER HARMINDER SINGH
Signed by: Harminder Singh 1/2026
0ACC0C0B0C0C4...

PREPARED BY
STV Engineers, Inc.
2101 Hawkins Street, Suite 1400
Charlotte, NC 28203
NC License Number F-0991

DOCUMENT NOT CONSIDERED FINAL UNLESS ALL SIGNATURES COMPLETED

REVISIONS

Docusign Envelope ID: EDBAE891-D46B-86FD-81A1-55ED8EA9BEEE

5/26/20

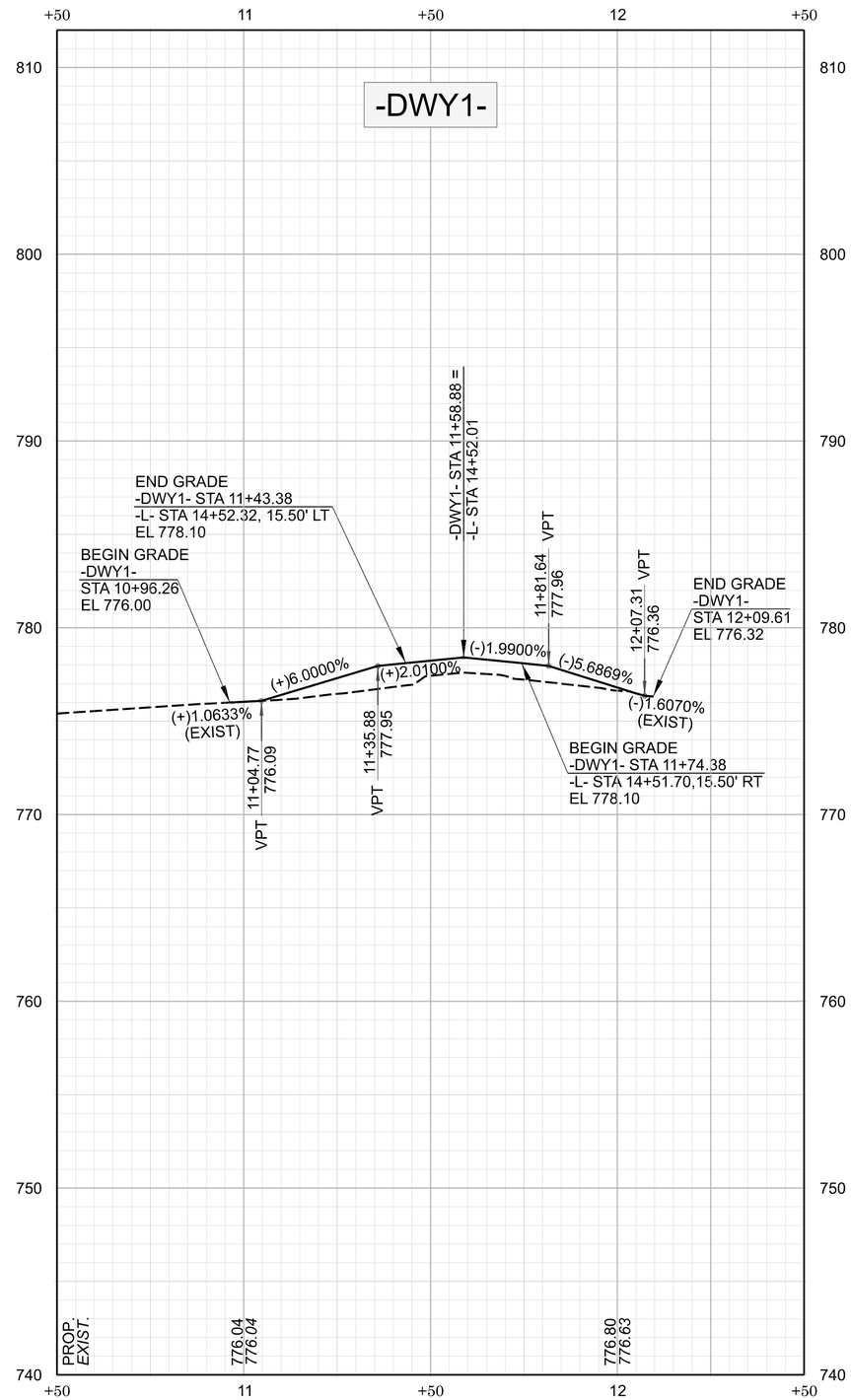

BP9-R002

007

NORTH CAROLINA
DEPARTMENT OF TRANSPORTATION
FORSYTH COUNTY

ROADWAY DESIGN UNIT

ROADWAY DESIGN ENGINEER

NORTH CAROLINA PROFESSIONAL SEAL 054248 ENGINEER MORGAN A. STAHL

Signed by: Morgan Stahl 7/1/2026
CCB59BA914974AD...

HYDRAULICS ENGINEER

NORTH CAROLINA PROFESSIONAL SEAL 044561 ENGINEER HARMINDER SINGH

Signed by: Harminder Singh 7/1/2026
D3C2C09B5C0D4AE...

PREPARED BY

STV Engineers, Inc.
2101 Hawkins Street, Suite 1400
Charlotte, NC 28203
NC License Number F-0991

DOCUMENT NOT CONSIDERED FINAL UNLESS ALL SIGNATURES COMPLETED

REVISIONS

09/08/99

TIP PROJECT: BP9.R002

STATE	STATE PROJECT REFERENCE NO.	SHEET NO.	TOTAL SHEETS
N.C.	BP9.R002	RW01	5

STATE OF NORTH CAROLINA
DIVISION OF HIGHWAYS

SURVEY CONTROL, EXISTING CENTERLINES, RIGHT OF WAY, EASEMENTS AND PROPERTY TIES

FORSYTH COUNTY

NC GRID
NAD 83 NA 2011

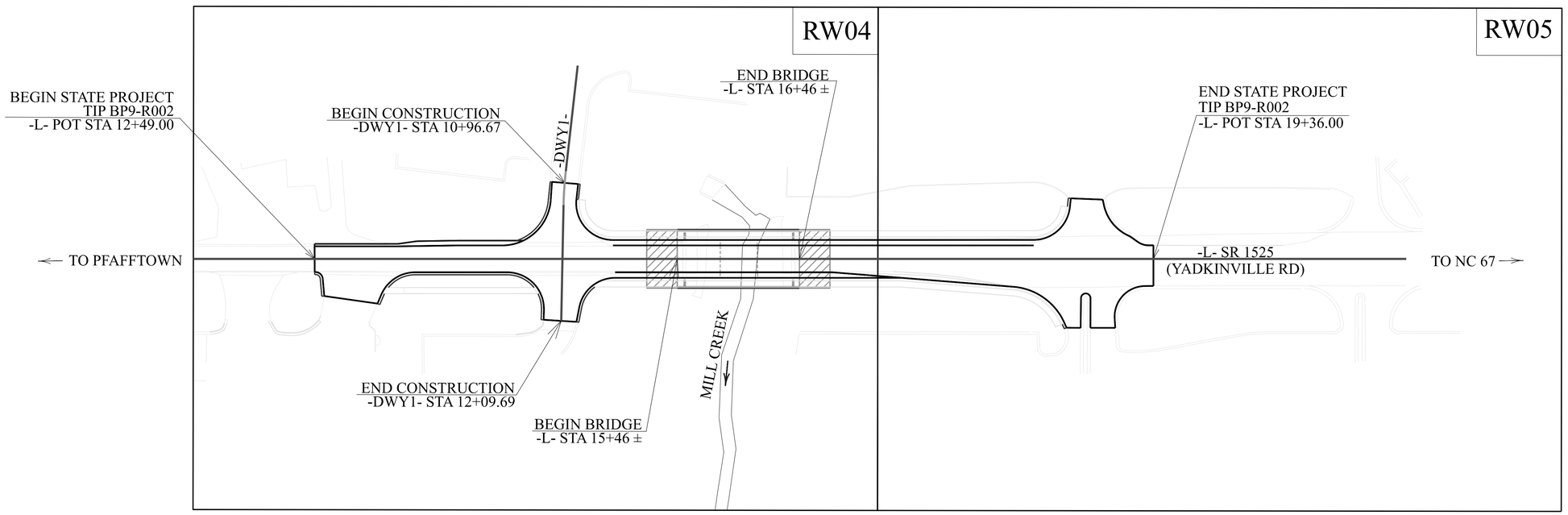

DOCUMENT NOT CONSIDERED FINAL UNLESS ALL SIGNATURES COMPLETED

GRAPHIC SCALES

50' 25' 0' 50' 100'

DATUM DESCRIPTION

THE LOCALIZED COORDINATE SYSTEM DEVELOPED FOR THIS PROJECT IS BASED ON THE STATE PLANE COORDINATES ESTABLISHED BY NCDOT FOR MONUMENT "330261-2"
WITH NAD 83/NA 2011 STATE PLANE GRID COORDINATES OF
NORTHING: 877481.7340 EASTING: 1611383.4490
ELEVATION: 775.87'
THE AVERAGE COMBINED GRID FACTOR USED ON THIS PROJECT (GROUND TO GRID) IS: 0.99996453
ALL LINEAR DIMENSIONS ARE LOCALIZED HORIZONTAL DISTANCES
VERTICAL DATUM USED IS NAVD 88/GEOID G12NC

Prepared in the Office of:

LOCATION AND SURVEYS
DIVISION 9
403 POLO ROAD
WINSTON-SALEM, NC 27105

2024 STANDARD SPECIFICATIONS

RIGHT OF WAY DATE: *MARCH 6, 2025*
LETTING DATE: *AUGUST 26, 2026*

PROFESSIONAL LAND SURVEYOR

NORTH CAROLINA PROFESSIONAL SEAL L-3877 LAND SURVEYOR MICHAEL L. MOTSINGER

Signed by: Michael Motsinger
FDB6FE70E23C40E...
05/14/2026

SIGNATURE: *DATE:*

PRIMARY SURVEY CONTROL SHEET

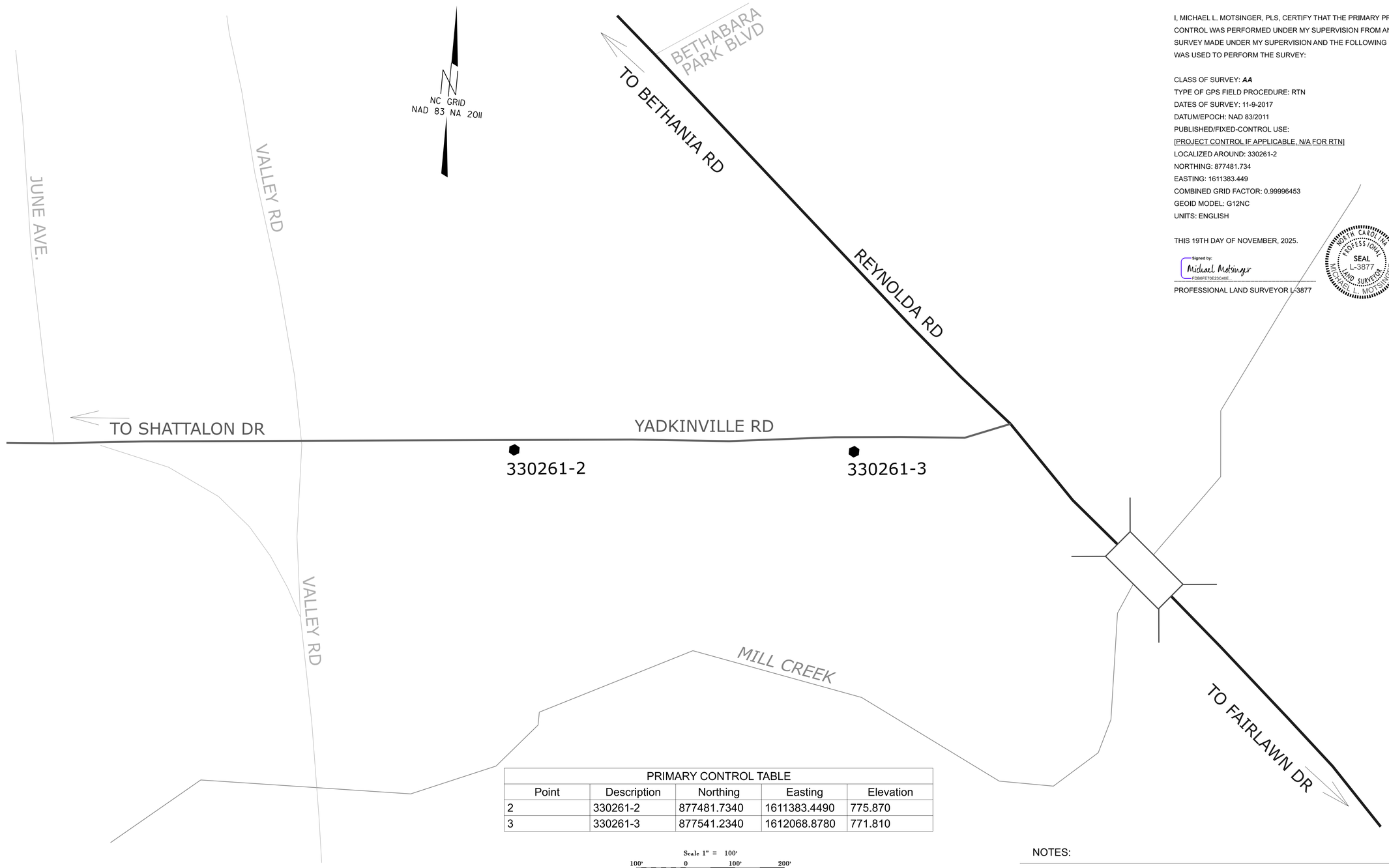

I, MICHAEL L. MOTSINGER, PLS, CERTIFY THAT THE PRIMARY PROJECT CONTROL WAS PERFORMED UNDER MY SUPERVISION FROM AN ACTUAL GPS SURVEY MADE UNDER MY SUPERVISION AND THE FOLLOWING INFORMATION WAS USED TO PERFORM THE SURVEY:

CLASS OF SURVEY: ***AA***
TYPE OF GPS FIELD PROCEDURE: RTN
DATES OF SURVEY: 11-9-2017
DATUM/EPOCH: NAD 83/2011
PUBLISHED/FIXED-CONTROL USE:
[PROJECT CONTROL IF APPLICABLE, N/A FOR RTN]
LOCALIZED AROUND: 330261-2
NORTHING: 877481.734
EASTING: 1611383.449
COMBINED GRID FACTOR: 0.99996453
GEOID MODEL: G12NC
UNITS: ENGLISH

THIS 19TH DAY OF NOVEMBER, 2025.

Signed by:
Michael Motsinger
FDB6FE70E23C40E...

PROFESSIONAL LAND SURVEYOR L-3877

NORTH CAROLINA PROFESSIONAL SEAL L-3877 LAND SURVEYOR MICHAEL L. MOTSINGER

PRIMARY CONTROL TABLE				
Point	Description	Northing	Easting	Elevation
2	330261-2	877481.7340	1611383.4490	775.870
3	330261-3	877541.2340	1612068.8780	771.810

Scale 1" = 100'
100' 0 100' 200'

NOTES:

1. THE PROPOSED ALIGNMENT CONTROL DATA FOR THIS PROJECT HAS BEEN COMPILED FROM VARIOUS SOURCES. IF FURTHER INFORMATION REGARDING PROJECT CONTROL IS NEEDED, PLEASE CONTACT THE LOCATION AND SURVEYS UNIT.

BP9.R002
R/W | D2C-1

NORTH CAROLINA DEPARTMENT OF TRANSPORTATION

PROFESSIONAL LAND SURVEYOR

NORTH CAROLINA PROFESSIONAL SEAL L-3877 LAND SURVEYOR MICHAEL L. MOTSINGER

DOCUMENT NOT CONSIDERED FINAL UNLESS ALL SIGNATURES ARE COMPLETED

2024 STANDARD SPECIFICATIONS

TIP PROJECT: *BP9.R002*
County:Forsyth

PREPARED FOR

LOCATION AND SURVEYS UNIT

PREPARED BY:
LOCATION AND SURVEYS
DIVISION 9
403 POLO RD
WINSTON-SALEM, NC 27105

5/26/20

SECONDARY SURVEY CONTROL SHEET

W/ EXISTING CENTERLINE ALIGNMENTS PRIOR TO CONSTRUCTION

BASELINE POINTS TABLE				
Point	Description	Northing	Easting	Elevation
1	BL-1	877409.7100	1610781.3620	785.73

BENCHMARK POINTS TABLE				
Benchmark	Description	Northing	Easting	Elevation
BM1	RR SPIKE IN A 15"SYCAMORE	877606	1611491	770.90
BM2	RR SPIKE IN A 12"MAPLE	877517	1612026	774.75

N
NC GRID
NAD 83 NA 2011

I, MICHAEL L. MOTSINGER, PLS, CERTIFY THAT THE SECONDARY BASELINE CONTROL FOR THIS PROJECT WAS COMPLETED UNDER MY DIRECT AND RESPONSIBLE CHARGE FROM AN ACTUAL SURVEY MADE UNDER MY SUPERVISION UTILIZING PRIMARY GPS CONTROL SET BY OTHERS; THAT ALL HORIZONTAL CLOSURES HAD A MINIMUM RATIO OF PRECISION OF 1:20,000 (CLASS AA) AND VERTICAL ACCURACY TO 1:10,000 (CLASS A). FIELD WORK WAS PERFORMED FROM NOVEMBER 2017 TO JANUARY 2018, AND ALL COORDINATES ARE BASED ON NAD 83/NA 2011 AND ALL ELEVATIONS ARE BASED ON NAVD 88; THAT THIS SURVEY WAS PERFORMED TO MEET THE REQUIREMENTS OF 21NCAC 56.1600 AS APPLICABLE.

THIS 18TH DAY OF NOVEMBER, 2025.

Signed by:
Michael Motsinger
FDB6FE70E23C40E...

PROFESSIONAL LAND SURVEYOR L-3877

NORTH CAROLINA PROFESSIONAL SEAL L-3877 LAND SURVEYOR MICHAEL L. MOTSINGER

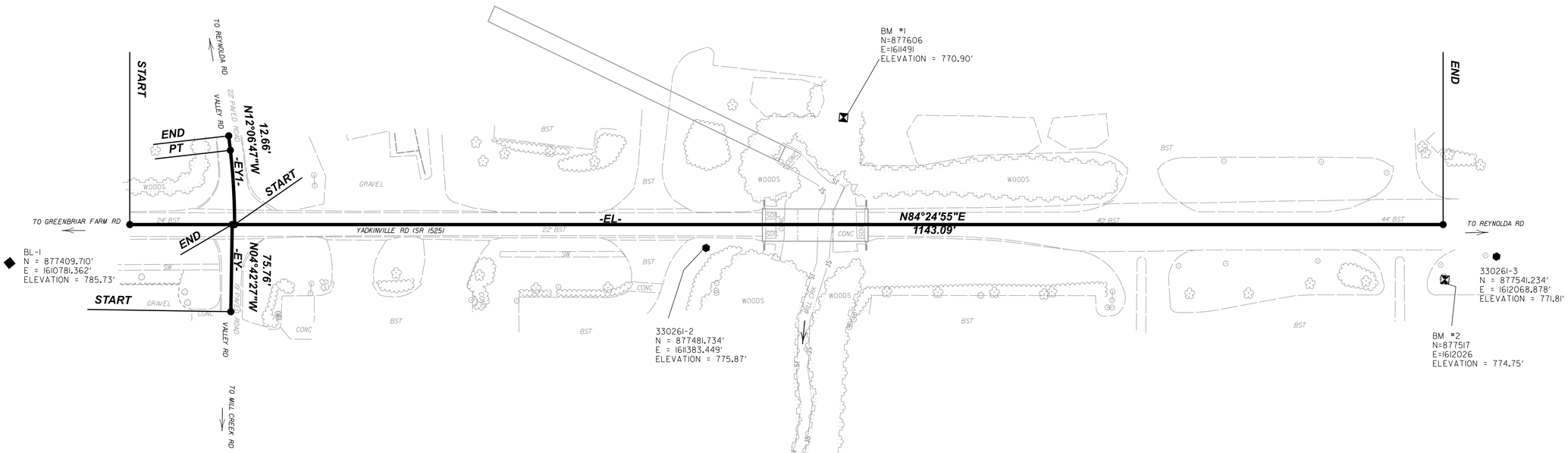

EXISTING ALIGNMENT NAME:EL									
POINT	NORTHING	EASTING	BEARING	DIST	DELTA	D	L	T	R
START	877453.1864	1610882.2811							
LINE			N 84°24'55" E	1143.0904					
END	877564.4318	1612019.9454							

EXISTING ALIGNMENT NAME:EY									
POINT	NORTHING	EASTING	BEARING	DIST	DELTA	D	L	T	R
START	877386.3598	1610977.2157							
LINE			N 04°42'27" W	75.7573					
END	877461.8615	1610970.9982							

EXISTING ALIGNMENT NAME:EY1									
POINT	NORTHING	EASTING	BEARING	DIST	DELTA	D	L	T	R
PC	877462.0654	1610973.0836							
CURVE					6.5" Left,10.1"	64.7145	32.3923	567.9837	
PT	877525.9751	1610963.1340							
LINE			N 12°06'47" W	12.6595					
END	877538.3527	1610960.4775							

50' 25' 0' 50' 100'

NOTES:

1. THE PROPOSED ALIGNMENT CONTROL DATA FOR THIS PROJECT HAS BEEN COMPILED FROM VARIOUS SOURCES. IF FURTHER INFORMATION REGARDING PROJECT CONTROL IS NEEDED, PLEASE CONTACT THE LOCATION AND SURVEYS UNIT.

BP9.R002
R/W | DZG-2

NORTH CAROLINA DEPARTMENT OF TRANSPORTATION

PROFESSIONAL LAND SURVEYOR

NORTH CAROLINA PROFESSIONAL SEAL L-3877 LAND SURVEYOR MICHAEL L. MOTSINGER

DOCUMENT NOT CONSIDERED FINAL UNLESS ALL SIGNATURES ARE COMPLETED

2024 STANDARD SPECIFICATIONS

TIP PROJECT: BP9.R002
County: Forsyth

PREPARED FOR

LOCATION AND SURVEYS UNIT

PREPARED BY:
LOCATION AND SURVEYS
DIVISION 9
403 POLO RD
WINSTON-SALEM, NC 27105

5/26/20

5/26/20

I, MICHAEL L. MOTSINGER, PLS, CERTIFY THAT THE RIGHT OF WAY AND PERMANENT EASEMENT MONUMENTATION FOR THIS PROJECT SHOWN HEREIN WAS COMPLETED UNDER MY DIRECT AND RESPONSIBLE CHARGE FROM AN ACTUAL SURVEY MADE UNDER MY SUPERVISION; THAT ALL HORIZONTAL CLOSURES HAD A MINIMUM RATIO OF PRECISION OF 1:10,000 (CLASS A). FIELD WORK WAS PERFORMED FROM NOVEMBER 2017 TO JANUARY 2018, AND ALL COORDINATES ARE BASED ON NAD83/NA 2011; THAT THIS SURVEY WAS PERFORMED TO MEET THE REQUIREMENTS OF 21NCAC 56.1600 AS APPLICABLE.

THIS 15TH DAY OF DECEMBER, 2025.

Signed by:
Michael Motsinger
FDB6FE70E23C40E...

PROFESSIONAL LAND SURVEYOR L-3877

NORTH CAROLINA PROFESSIONAL SEAL L-3877 LAND SURVEYOR MICHAEL L. MOTSINGER

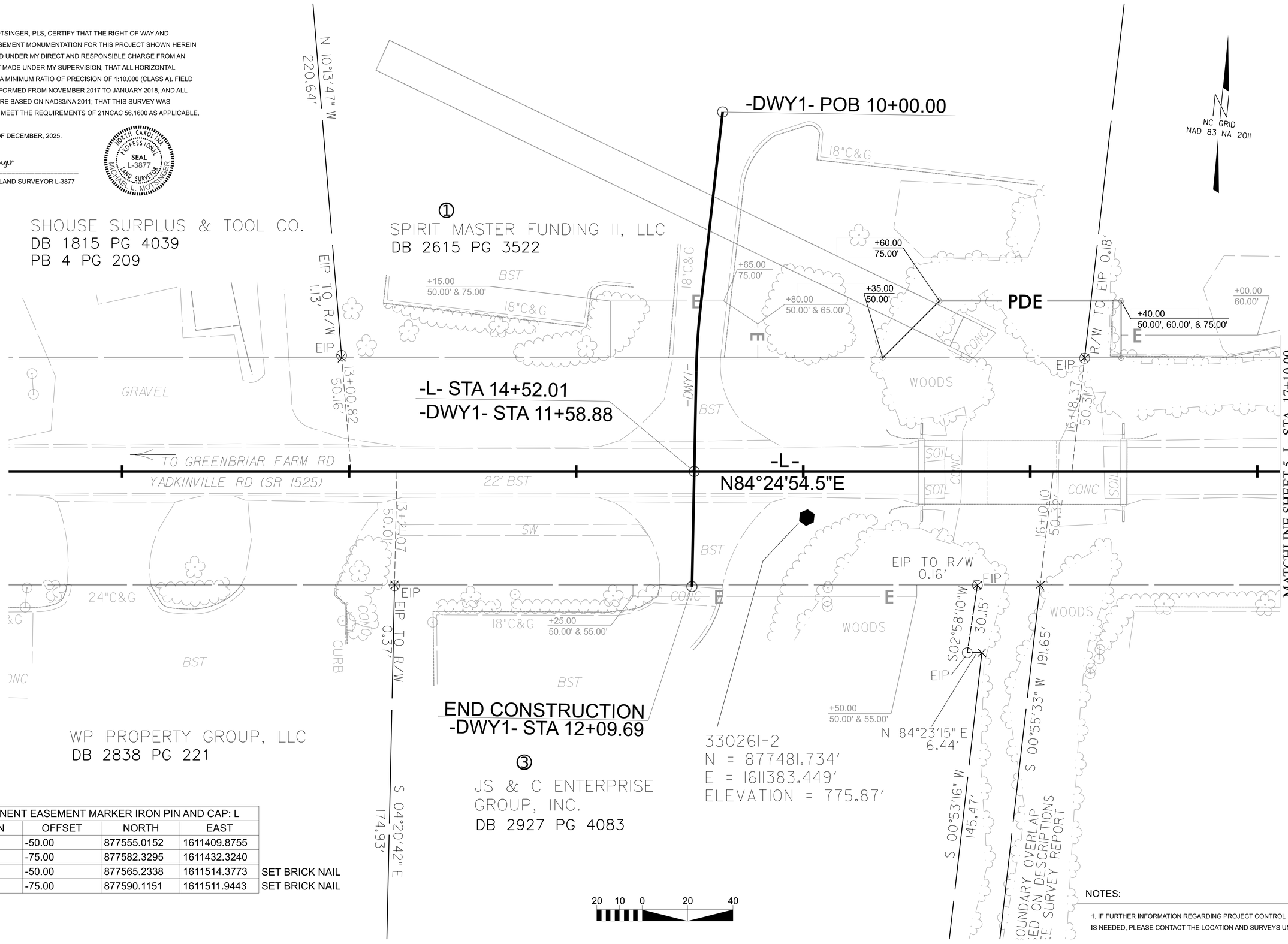

PERMANENT EASEMENT MARKER IRON PIN AND CAP: L				
STATION	OFFSET	NORTH	EAST	
15+35.00	-50.00	877555.0152	1611409.8755	
15+60.00	-75.00	877582.3295	1611432.3240	
16+40.00	-50.00	877565.2338	1611514.3773	SET BRICK NAIL
16+40.00	-75.00	877590.1151	1611511.9443	SET BRICK NAIL

NOTES:

1. IF FURTHER INFORMATION REGARDING PROJECT CONTROL IS NEEDED, PLEASE CONTACT THE LOCATION AND SURVEYS UNIT.

BP9.R002

R/W 04

NORTH CAROLINA DEPARTMENT OF TRANSPORTATION

PROFESSIONAL LAND SURVEYOR

NORTH CAROLINA PROFESSIONAL SEAL L-3877 LAND SURVEYOR MICHAEL L. MOTSINGER

DOCUMENT NOT CONSIDERED FINAL UNLESS ALL SIGNATURES ARE COMPLETED

2024 STANDARD SPECIFICATIONS

TIP PROJECT: BP9.R002
County: Forsyth

PREPARED FOR

LOCATION AND SURVEYS UNIT

PREPARED BY:
LOCATION & SURVEYS
DIVISION 9
403 POLO RD
WINSTON-SALEM, NC 27105

5/26/20

PROPOSED ALIGNMENT: L												
POINT	STATION	NORTHING	EASTING	BEARING	DIST	DELTA	D	L	T	R	LT	ST
START	10+00.00	877453.1864	1610882.2811	N84°24'54.519"E	1143.0904							
END	21+43.09	877564.4318	1612019.9454									

PROPOSED ALIGNMENT: Y												
POINT	STATION	NORTHING	EASTING	BEARING	DIST	DELTA	D	L	T	R	LT	ST
START	10+00.00	877538.3527	1610960.4775	S12°06'46.72"E	8.64							
PC	10+08.64	877529.9092	1610962.2897	S08°24'36.99"E	47.92	07°24'19.5" Right	15°26'37.0"	47.9513	24.0091	371.0000		
PT	10+56.59	877482.5066	1610969.2982	S04°42'27.26"E	96.47							
END	11+53.06	877386.3598	1610977.2157									

PROPOSED ALIGNMENT: DWY1												
POINT	STATION	NORTHING	EASTING	BEARING	DIST	DELTA	D	L	T	R	LT	ST
START	10+00.00	877655.8932	1611329.1775	S00°51'48.70"W	87.02							
PC	10+87.02	877568.8857	1611327.8661	S01°47'08.05"E	27.74	05°17'53.5" Left	19°05'54.9"	27.74	13.88	300.00		
PT	11+14.76	877541.1678	1611328.7302	S04°26'04.80"E	94.93							
END	12+09.69	877446.5220	1611336.0704									

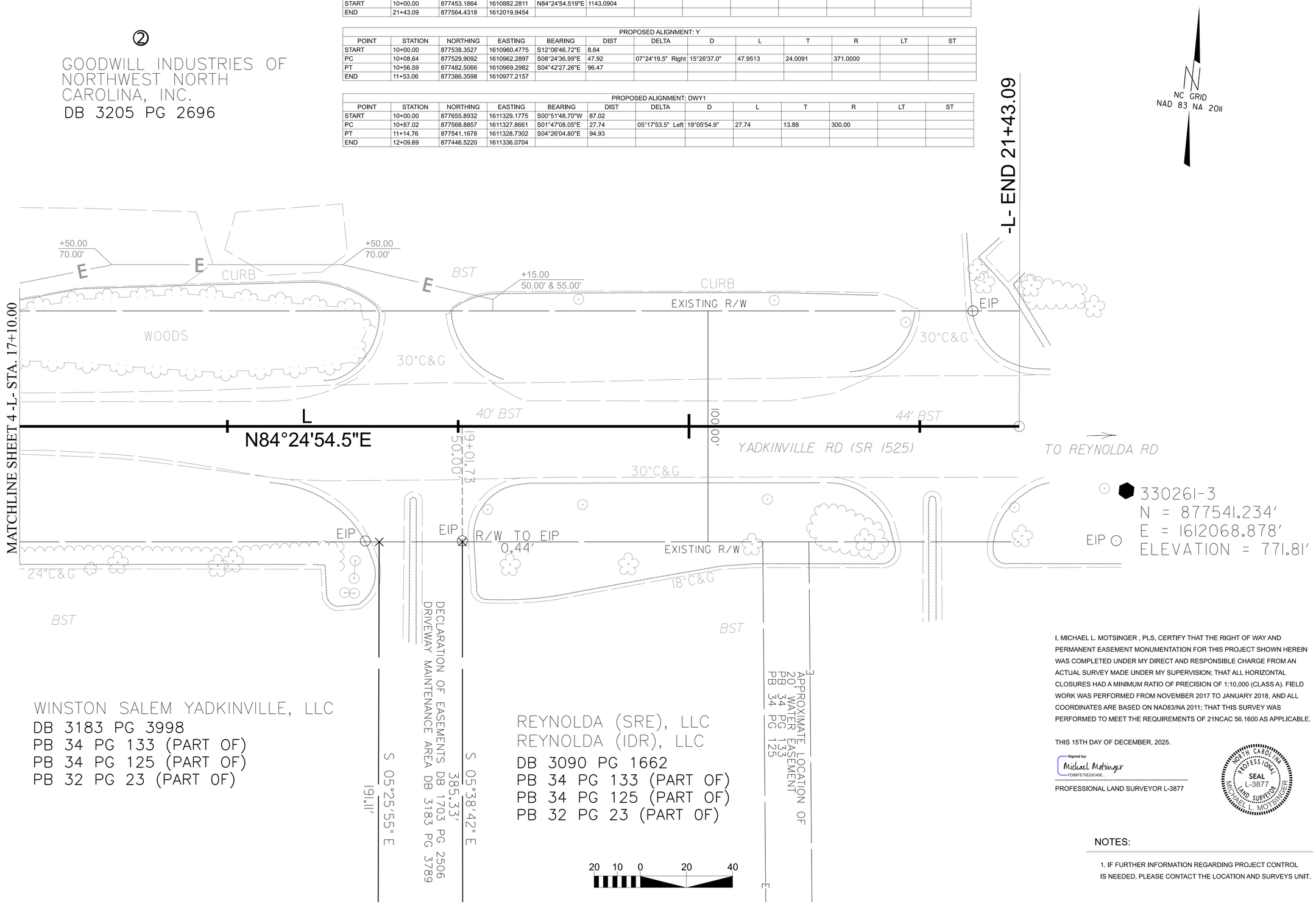

I, MICHAEL L. MOTSINGER , PLS, CERTIFY THAT THE RIGHT OF WAY AND PERMANENT EASEMENT MONUMENTATION FOR THIS PROJECT SHOWN HEREIN WAS COMPLETED UNDER MY DIRECT AND RESPONSIBLE CHARGE FROM AN ACTUAL SURVEY MADE UNDER MY SUPERVISION; THAT ALL HORIZONTAL CLOSURES HAD A MINIMUM RATIO OF PRECISION OF 1:10,000 (CLASS A). FIELD WORK WAS PERFORMED FROM NOVEMBER 2017 TO JANUARY 2018, AND ALL COORDINATES ARE BASED ON NAD83/NA 2011; THAT THIS SURVEY WAS PERFORMED TO MEET THE REQUIREMENTS OF 21NCAC 56.1600 AS APPLICABLE.

THIS 15TH DAY OF DECEMBER, 2025.

Signed by:
Michael Motsinger
FDB6FE70E23C40E...

PROFESSIONAL LAND SURVEYOR L-3877

NORTH CAROLINA PROFESSIONAL SEAL L-3877 LAND SURVEYOR MICHAEL L. MOTSINGER

NOTES:

1. IF FURTHER INFORMATION REGARDING PROJECT CONTROL IS NEEDED, PLEASE CONTACT THE LOCATION AND SURVEYS UNIT.

BP9.R002
R/W 05

NORTH CAROLINA DEPARTMENT OF TRANSPORTATION

PROFESSIONAL LAND SURVEYOR

DOCUMENT NOT CONSIDERED FINAL UNLESS ALL SIGNATURES ARE COMPLETED

2024 STANDARD SPECIFICATIONS

TIP PROJECT: BP9.R002
County: Forsyth

PREPARED FOR

LOCATION AND SURVEYS UNIT

PREPARED BY:
LOCATION & SURVEYS
DIVISION 9
403 POLO RD
WINSTON-SALEM, NC 27105

Docusign Envelope ID: E08AB706-B6A5-86A3-82CC-4BBFC6D2F5B0

STATE OF NORTH CAROLINA
DIVISION OF HIGHWAYS

TRANSPORTATION MANAGEMENT PLAN

FORSYTH COUNTY

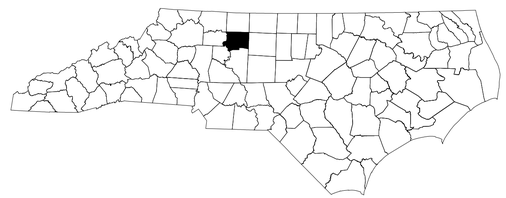

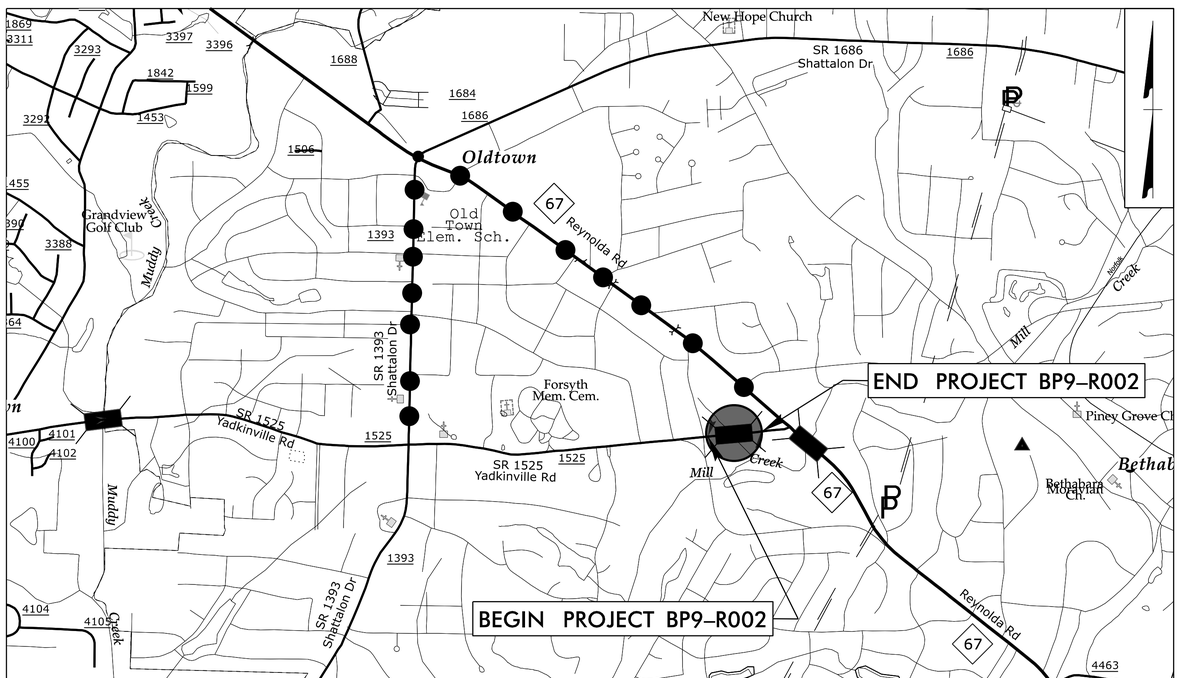

DETOUR ROUTE

VICINITY MAP

N.T.S.

INDEX OF SHEETS

SHEET NO.	TITLE
TMP-1	TITLE SHEET AND INDEX OF SHEETS
TMP-2	TRANSPORTATION OPERATIONS PLAN
TMP-3	SPECIAL SIGN DESIGN

SHEET NO.
TMP-1

TIP PROJECT: BP9-R002

DOCUMENT NOT CONSIDERED FINAL
UNLESS ALL SIGNATURES COMPLETED

WORK ZONE SAFETY & MOBILITY
"from the MOUNTAINS to the COAST"

PLANS PREPARED BY:
STV Engineers, Inc.
2151 Hawkins Street, Suite 1400
Charlotte, NC 28203
NC License Number F-0991

SEAN C. STEPHENS, P.E.
PROJECT ENGINEER

MORGAN STAHL, P.E.
PROJECT DESIGN ENGINEER

NCDOT CONTACTS:

JEREMY KEATON, P.E.
BRIDGE PROGRAM MANAGER

APPROVED: Signed by: Morgan Stahl CC8398A914974AD...

DATE: 7/1/2026

SEAL

NORTH CAROLINA PROFESSIONAL SEAL 054248 ENGINEER MORGAN A. STAHL

6/11/2026
pw://stv-pw.bentley.com:stv-pw-01/Documents/NCDOT/4022560 BP9.R002.3/Work Zone Traffic Control/BP9-R002_TMP_TSH
User:StahlM

Docusign Envelope ID: E08AB706-B6A5-86A3-82CC-4BBFC8D2F5B0

OFF-SITE DETOUR SIGNING AND ROAD CLOSURE SIGNING

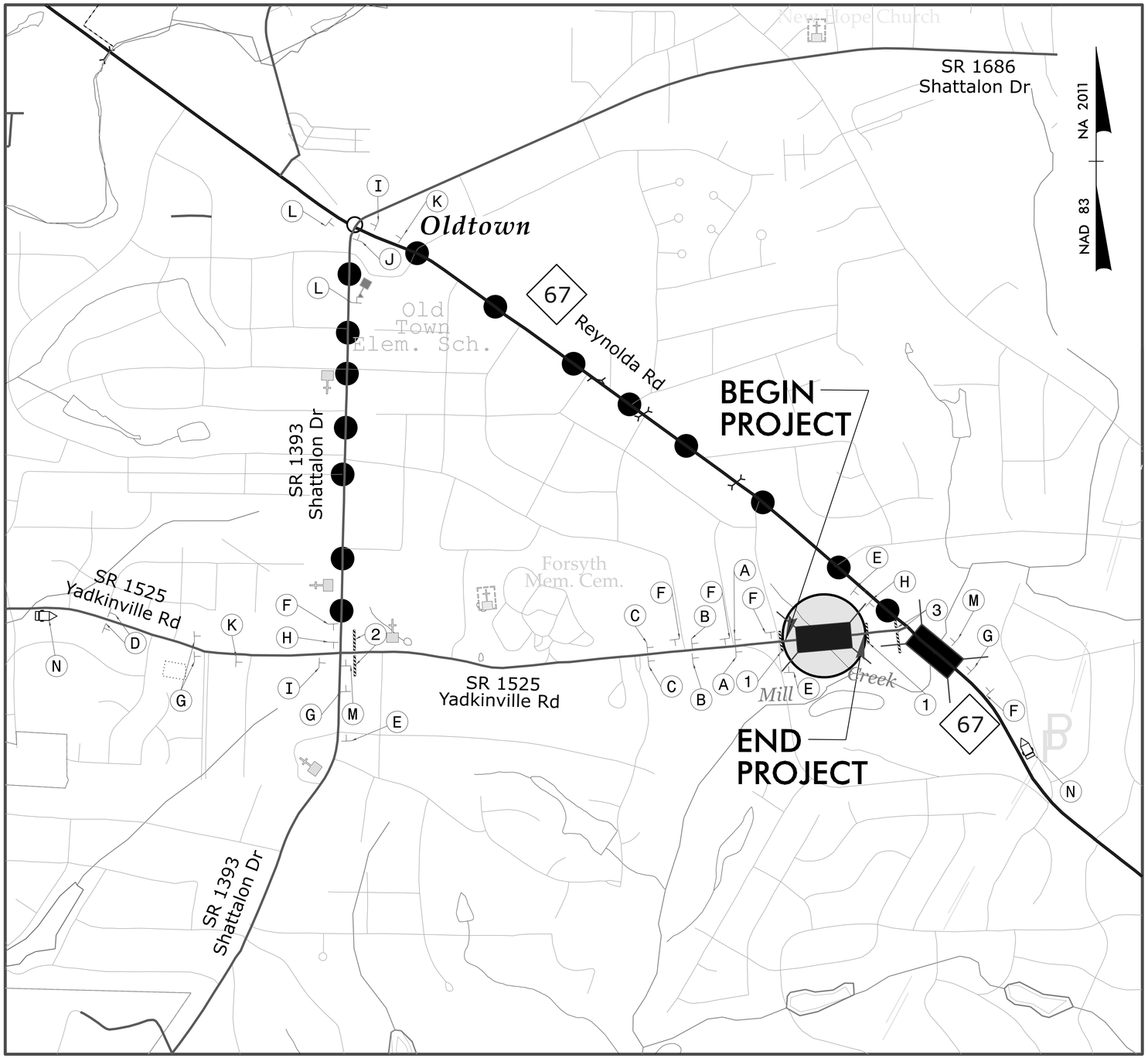

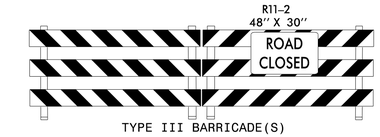

1

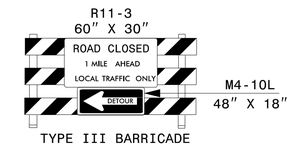

2

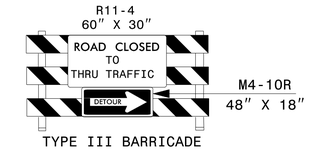

3

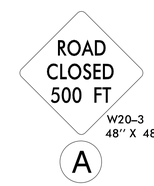

A

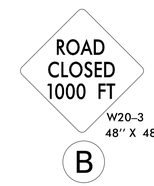

B

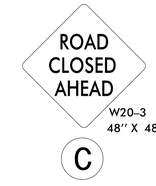

C

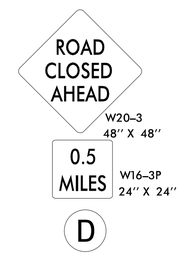

D

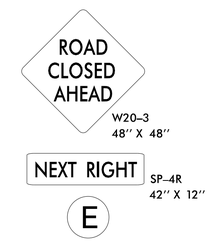

E

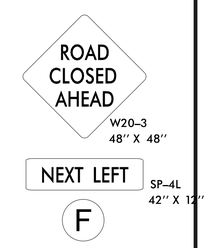

F

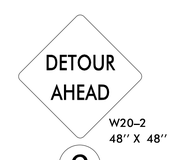

G

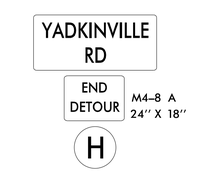

H

I

J

K

L

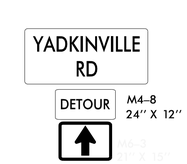

M

MESSAGE PRIOR TO CLOSURE:

MESSAGE NO. 1	MESSAGE NO. 2
YADKINVILLE RD WILL BE CLOSED	STARTING (DAY) (TIME)

CHANGEABLE MESSAGE SIGN

MESSAGE DURING CLOSURE:

MESSAGE NO. 1	MESSAGE NO. 2
YADKINVILLE RD CLOSED 1 MILE	FOLLOW POSTED DETOUR

CHANGEABLE MESSAGE SIGN

N

CONTRACTOR TO MAINTAIN 10' WIDE LANE ACCESS TO ALL DRIVEWAYS AT ALL TIMES.

SEE ROADWAY STD DWG 1101.03, SHEET 1 OF 9 FOR ADVANCE WARNING AND BARRICADE PLACEMENT.

BP9-R002
TMP | 002

NORTH CAROLINA DEPARTMENT OF TRANSPORTATION FORSYTH COUNTY

APPROVED: _____

DATE: _____

SEAL: ROADWAY DESIGN ENGINEER
NORTH CAROLINA PROFESSIONAL SEAL 054248 ENGINEER MORGAN A. STALK

Signature: Morgan Stalk 1/2026

DOCUMENT NOT CONSIDERED FINAL UNLESS ALL SIGNATURES COMPLETED

STATE OF NORTH CAROLINA DEPARTMENT OF TRANSPORTATION

PREPARED BY
STV
STV Engineers, Inc.
2150 Hawkins Street, Suite 1400
Charlotte, NC 28203
NC License Number F-0991

REVISIONS

$$$

Docusign Envelope ID: E08AB706-B6A5-86A3-82CC-4BBFC8D2F5B0

BRIDGE #261

SIGN NUMBER: I-1
TYPE: D
QUANTITY: See Plans

BACKG COLOR: Orange
COPY COLOR: Black

SYMBOL	X	Y	WID	HT

SIGN WIDTH: 48″
HEIGHT: 24″
TOTAL AREA: 8.0 Sq.Ft.

BORDER TYPE: FLUSH
RECESS: 0.47″
WIDTH: 0.63″
RADII: 1.5″

NO. Z BARS:
LENGTH:

MAT'L: 0.080″ (2.0 mm) ALUMINUM

USE NOTES: 1,2
1. Legend and border shall be direct applied encapsulated lens reflective sheeting.
2. Background shall be NC Grade B fluorescent.

DESIGN BY: SLS
CHECKED BY: GHM
PROJECT ID: BP9-R002
DIV: 9
DATE: Oct 21, 2024

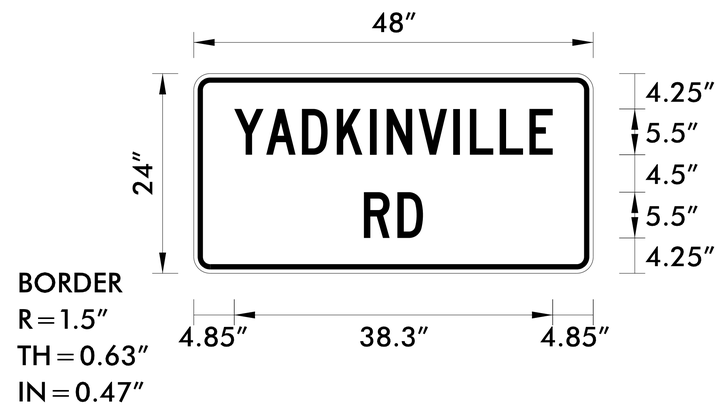

Spacing Factor is 1 unless specified otherwise

LETTER POSITIONS

Letter positions are to the lower left corners

																											Series/Size Text Length
	Y	A	D	K	I	N	V	I	L	L	E																C 2000 / 5.5
	4.9	8.7	13	17.2	21.2	23.2	27	31.2	33.2	36.8	40.3																38.3
	R	D																									C 2000 / 5.5
	20.5	24.5																									7.1

NORTH CAROLINA D.O.T. SIGN DETAIL

BP9-R002
TMP 003

NORTH CAROLINA
DEPARTMENT OF TRANSPORTATION
FORSYTH COUNTY

APPROVED: _____

DATE: _____

SEAL: ROADWAY DESIGN ENGINEER
NORTH CAROLINA PROFESSIONAL SEAL 054248 ENGINEER MORGAN A. STALL
Signed by: Morgan Stall 7/1/2026
DOCUMENT NOT CONSIDERED FINAL UNLESS ALL SIGNATURES COMPLETED

STATE OF NORTH CAROLINA DEPARTMENT OF TRANSPORTATION

PREPARED BY
STV Engineers, Inc.
2101 Hawkins Street, Suite 1400
Charlotte, NC 28203
NC License Number F-0991

REVISIONS

6/11/2026
8:22:22 AM
bentleyc:stv-pw-01/Documents/NCDOT/4022560 BP9,R002.3/Work Zone Traffic Control/BP9-R002_TMP02.dgn
User:StohlM

Docusign Envelope ID: 40A789C3-4F2B-8A17-818C-BA6C98377FFA

5/26/20

STATE OF NORTH CAROLINA
DEPARTMENT OF TRANSPORTATION

PAVEMENT MARKING & SIGNING PLANS

FORSYTH COUNTY

LOCATION: BRIDGE NO. 330261 ON SR 1525 (YADKINVILLE RD) OVER UT TO MILL CREEK

INDEX

SHEET NO.	DESCRIPTION
PMP-1	PAVEMENT MARKING PLAN TITLE SHEET
PMP-2	PAVEMENT MARKING DETAIL

ROADWAY STANDARD DRAWING

THE FOLLOWING ROADWAY STANDARDS AS APPEAR IN "ROADWAY STANDARD DRAWINGS" - PROJECT SERVICES UNIT - N.C. DEPARTMENT OF TRANSPORTATION - RALEIGH, N.C., DATED JANUARY 2024 ARE APPLICABLE TO THIS PROJECT AND BY REFERENCE HEREBY ARE CONSIDERED A PART OF THESE PLANS:

STD. NO.	TITLE
1205.01	PAVEMENT MARKINGS - LINE TYPES AND OFFSETS
1205.02	PAVEMENT MARKINGS - TWO-LANE AND MULTILANE ROADWAYS
1205.05	PAVEMENT MARKINGS - TURN LANES
1205.12	PAVEMENT MARKINGS - BRIDGES
1262.01	GUARDRAIL END DELINEATION

SUMMARY OF QUANTITIES

ITEM NO.

DESC. NO.	SECT. NO.	ITEM DESCRIPTION	QUANTITY	UNIT
4155000000-N	907	DISPOSAL OF SIGN SYSTEM, U-CHANNEL	8	EA
4890000000-E	SP	INTEGRATED MULTIPOLYMER PAVEMENT MARKING LINES (4", 90 MILS)	2500	LF

PLAN PREPARED BY: STV ENGINEERS, INC.
2151 HAWKINS STREET, SUITE 1400
CHARLOTTE, NC 28203

MORGAN STAHL, PE — PROJECT ENGINEER

CARLOS OWENS — PROJECT DESIGNER

PAVEMENT MARKING GENERAL NOTES

THE FOLLOWING GENERAL NOTES APPLY AT ALL TIMES FOR THE DURATION OF THE CONSTRUCTION PROJECT, EXCEPT WHEN OTHERWISE NOTED IN THE PLAN, OR DIRECTED BY THE ENGINEER.

A) THE CONTRACTOR WILL INSTALL PAVEMENT MARKINGS AND PAVEMENT MARKERS ON THE FINAL SURFACE AS FOLLOWS:

ROAD NAME	MARKING	MARKER
SR 1525 (YADKINVILLE ROAD)	INTEGRATED MULTIPOLYMER	NONE

B) TIE PROPOSED PAVEMENT MARKING LINES TO EXISTING PAVEMENT MARKING LINES.

C) REMOVE/REPLACE ANY CONFLICTING/DAMAGED PAVEMENT MARKINGS AND MARKERS.

D) PASSING ZONES WILL BE DETERMINED IN THE FIELD AND MUST BE APPROVED BY THE ENGINEER.

E) REMOVE ALL RESIDUE AND SURFACE LAITANCE BY ACCEPTABLE METHODS ON CONCRETE BRIDGE DECKS PRIOR TO PLACING POLYUREA PAVEMENT MARKING MATERIAL.

SIGNING GENERAL NOTES

A) IF REMOVAL OR RELOCATION OF SIGNS ON PRIVATE STREET (NON-STATE MAINTAINED) IS REQUIRED DUE TO CONSTRUCTION, THE CONTRACTOR SHALL INFORM THE ENGINEER. THE WORK WILL BE COMPLETED BY OTHERS.

B) PLANS DO NOT INCLUDE TEMPORARY CONSTRUCTION SIGNING. SEE TRANSPORTATION MANAGEMENT PLANS.

C) WHEN NOT STATIONED OR DIMENSIONED ON PLANS, ALL SIGNS SHALL BE FIELD LOCATED BY THE ENGINEER.

D) WHEN EXISTING SIGNS ARE REMOVED AND INSTALLED ON NEW SUPPORTS, THE RE-ERECTION SHALL IMMEDIATELY FOLLOW THE REMOVAL.

BP9-R002

PMP | 001

NORTH CAROLINA
DEPARTMENT OF TRANSPORTATION
FORSYTH COUNTY

APPROVED: _____

DATE: _____

SEAL: ROADWAY DESIGN ENGINEER

NORTH CAROLINA PROFESSIONAL SEAL 054248 ENGINEER MORGAN A. STAHL

Signed by: Morgan Stahl 7/1/2026

DOCUSIGN ENVELOPE ID: 40A789C3-4F2B-8A17-818C-BA6C98377FFA

DOCUMENT NOT CONSIDERED FINAL UNLESS ALL SIGNATURES COMPLETED

STATE OF NORTH CAROLINA DEPARTMENT OF TRANSPORTATION

PREPARED BY

STV Engineers, Inc.
2151 Hawkins Street, Suite 1400
Charlotte, NC 28203
NC License Number F-0991

TIP PROJECT: BP9.R002

Docusign Envelope ID: 40A789C3-4F2B-8A17-818C-BA6C98377FFA

PAVEMENT MARKING AND SIGNING DETAIL

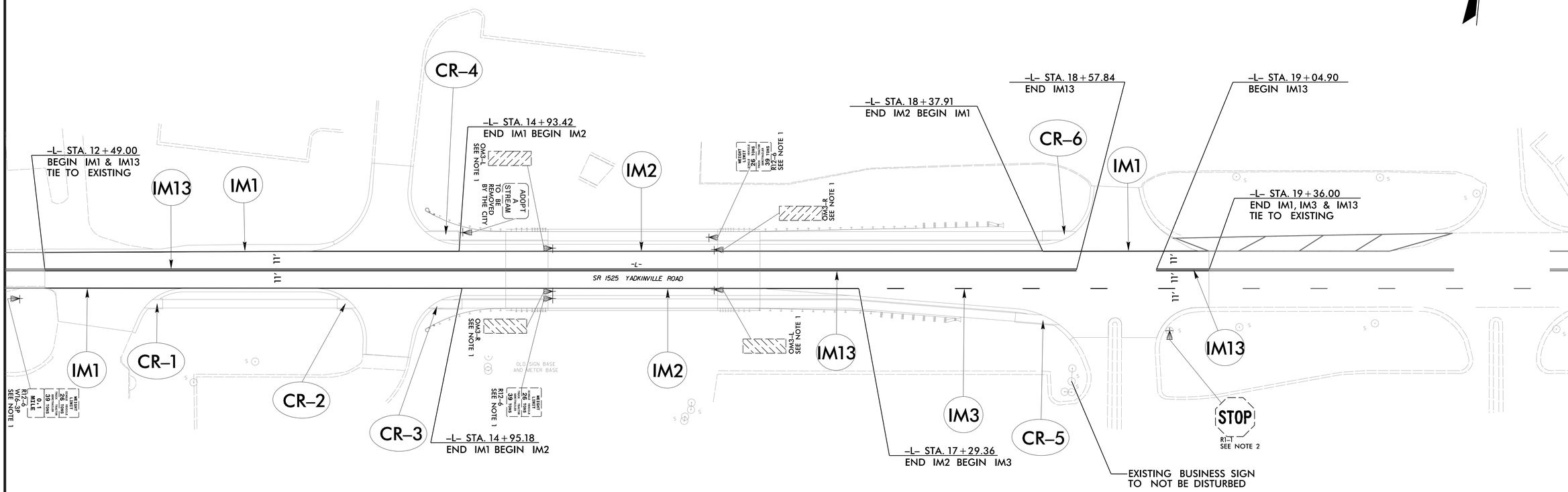

PROJECT NOTES
1. DISPOSAL SIGN SYSTEM, U-CHANNEL
2. TO REMAIN

CR No.	ALIGN.	STATION	OFFSET	CURB TYPE
CR-1	-L-	13+10+/-	19.41 RT	STD 848.06 - TYPE 1 MODIFIED
CR-2	-L-	14+30+/-	19.50 RT	STD 848.06 - TYPE 1 MODIFIED
CR-3	-L-	14+80+/-	19.06 RT	STD 848.06 - TYPE 1
CR-4	-L-	14+78+/-	19.16 LT	STD 848.06 - TYPE 1
CR-5	-L-	18+42+/-	29.26 RT	STD 848.06 - TYPE 1
CR-6	-L-	18+53+/-	19.29 LT	STD 848.06 - TYPE 1

PAVEMENT MARKING SCHEDULE	
IM1 - INTEGRATED MULTIPOLYMER	WHITE EDGELINE (4", 90 MIL)
IM2 - INTEGRATED MULTIPOLYMER	WHITE SOLID LANE LINE (4", 90 MIL)
IM3 - INTEGRATED MULTIPOLYMER	10 FT. WHITE SKIP (4", 90 MIL)
IM13 - INTEGRATED MULTIPOLYMER	YELLOW DOUBLE CENTER (4", 90 MIL)

GRAPHICAL SCALE

30′ 0′ 30′ 60′

15′

BP9-R002

PMP 002

NORTH CAROLINA
DEPARTMENT OF TRANSPORTATION
FORSYTH COUNTY

APPROVED: _____

DATE: _____

SEAL:

ROADWAY DESIGN ENGINEER

NORTH CAROLINA PROFESSIONAL SEAL 054248 ENGINEER MORGAN A. STAHL

Signature: Morgan Stahl 7/1/2026

DOCUMENT NOT CONSIDERED FINAL UNLESS ALL SIGNATURES COMPLETED

STATE OF NORTH CAROLINA DEPARTMENT OF TRANSPORTATION

PREPARED BY

STV Engineers, Inc.
2101 Hawkins Street, Suite 1400
Charlotte, NC 28203
NC License Number F-0991

REVISIONS

TIP PROJECT: BP9-R002

STATE	STATE PROJECT REFERENCE NO.	SHEET NO.	TOTAL SHEETS
N.C.	BP9-R002	EC-1	

STATE PROJ. NO.	F. A. PROJ. NO.	DESCRIPTION

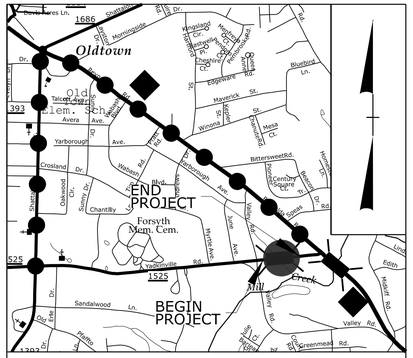

VICINITY MAP (NTS)

STATE OF NORTH CAROLINA

DIVISION OF HIGHWAYS

PLAN FOR PROPOSED HIGHWAY EROSION CONTROL

FORSYTH COUNTY

LOCATION: *BRIDGE NO. 330261 (ASHE BRIDGE) ON SR 1525 (YADKINVILLE RD) OVER MILL CREEK*

TYPE OF WORK: *GRADING, PAVING, DRAINAGE, AND STRUCTURE*

NAD 83
NA 2011

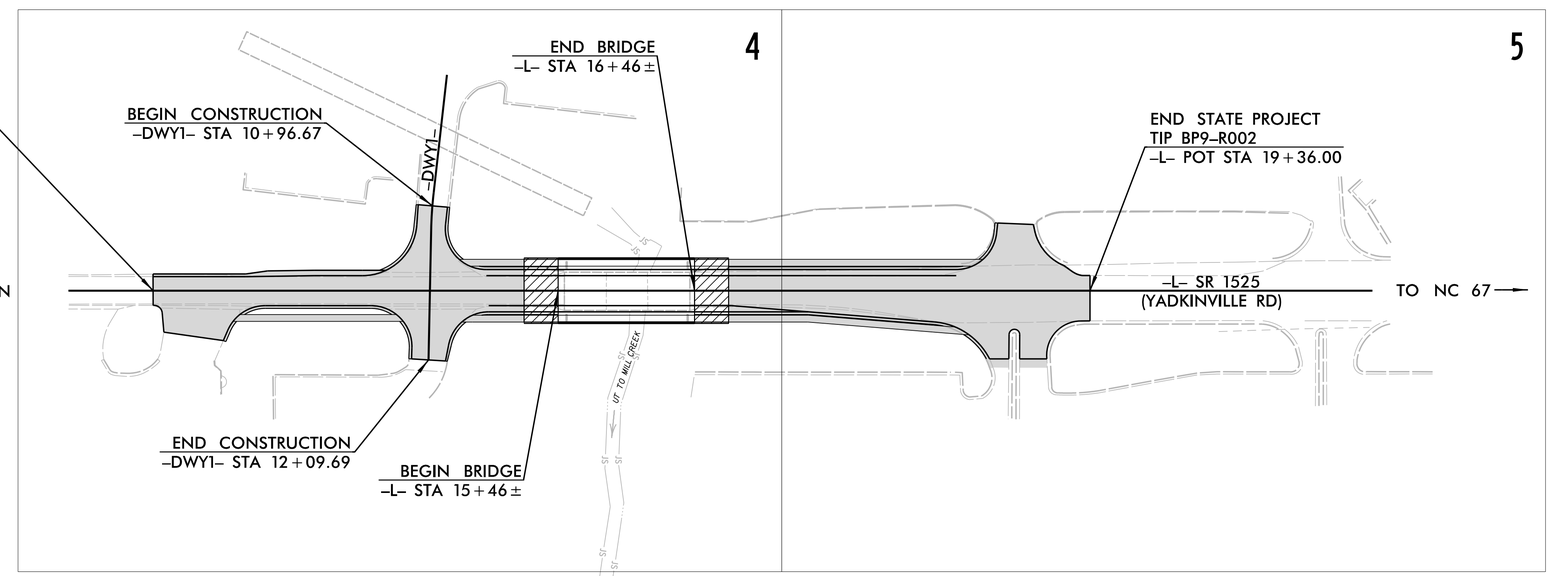

THIS PROJECT CONTAINS EROSION CONTROL PLANS FOR CLEARING AND GRUBBING PHASE OF CONSTRUCTION.

GRAPHIC SCALE

20 10 0 20 40

PLANS

THESE EROSION AND SEDIMENT CONTROL PLANS COMPLY WITH THE REGULATIONS SET FORTH BY THE NCG 010000 GENERAL STORMWATER CONSTRUCTION PERMIT ISSUED BY THE NORTH CAROLINA DEPARTMENT OF ENVIRONMENTAL QUALITY DIVISION OF ENERGY, MINERAL, AND LAND RESOURCES.

WETHERILL ENGINEERING

1223 JONES FRANKLIN ROAD
Raleigh, N.C. 27606
License No. F-0377
Bus: 919 851 8077
Fax: 919 851 8107

Prepared in the Office of:

WETHERILL ENGINEERING, INC.

1223 JONES FRANKLIN ROAD
RALEIGH, NC 27606

Designed by:

KATIE ESTEP	*4485*
NAME	*LEVEL III CERTIFICATION NO.*

Roadway Standard Drawings

The "Roadway Standard Drawings"- Roadway Design Unit - N. C. Department of Transportation - Raleigh, N. C., dated January 2024 and the latest revision thereto are applicable to this project and by reference hereby are considered a part of these plans.

1/9/2025
R:\Hydraulics\BP9_R002_EC_TSH.dgn
USER: KATIE.ESTEP

PROJECT REFERENCE NO.	SHEET NO.
BP9-R002	EC-02

DIVISION OF HIGHWAYS
STATE OF NORTH CAROLINA

EROSION & SEDIMENT CONTROL LEGEND

Std. #	Description	Symbol
1605.01	Temporary Silt Fence	
1606.01	Special Sediment Control Fence	
1622.01	Temporary Berms and Slope Drains	
1630.02	Silt Basin Type B	
1630.03	Temporary Silt Ditch	TSD
1630.04	Stilling Basin	
1630.05	Temporary Diversion	TD
1630.06	Special Stilling Basin	
1630.07	Skimmer Basin	
1630.08	Tiered Skimmer Basin	
1630.09	Earthen Dam with Skimmer	
	Infiltration Basin	
	Rock Inlet Sediment Trap:	
1632.01	Type A	A
1632.02	Type B	B
1632.03	Type C	C

Std. #	Description	Symbol
1633.01	Temporary Rock Silt Check Type A	
1633.02	Temporary Rock Silt Check Type B	
1633.03	Temporary Rock Silt Check Type A with Excelsior Matting and Flocculant	
1634.01	Temporary Rock Sediment Dam Type A	
1634.02	Temporary Rock Sediment Dam Type B	
1635.01	Rock Pipe Inlet Sediment Trap Type A	A
1635.02	Rock Pipe Inlet Sediment Trap Type B	B
1636.01	Excelsior Wattle Check	
1636.01	Excelsior Wattle Check with Flocculant	
1636.01	Coir Fiber Wattle Check	
1636.01	Coir Fiber Wattle Check with Flocculant	
1636.02	Silt Fence Excelsior Wattle Break	EW
	Silt Fence Coir Fiber Wattle Break	CFW
1636.03	Excelsior Wattle Barrier	—EW—EW—EW—
1636.03	Coir Fiber Wattle Barrier	—CFW—CFW—CFW—

PROJECT REFERENCE NO.	SHEET NO.
BP9-R002	EC-2A
R/W SHEET NO.	

ONSITE CONCRETE WASHOUT STRUCTURE WITH LINER

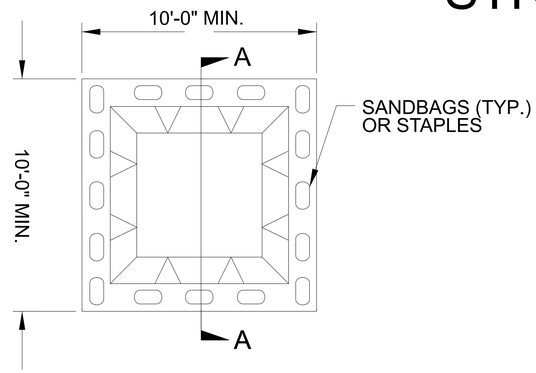

PLAN

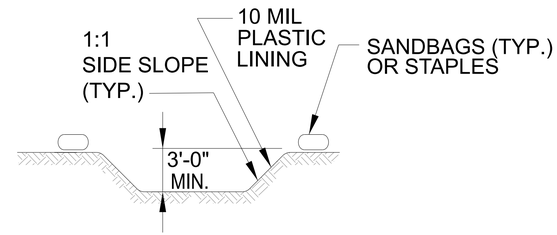

SECTION A-A

NOTES:
1. ACTUAL LOCATION DETERMINED IN FIELD

2. THE CONCRETE WASHOUT STRUCTURES SHALL BE MAINTAINED WHEN THE LIQUID AND/OR SOLID REACHES 75% OF THE STRUCTURES CAPACITY TO PROVIDE ADEQUATE HOLDING CAPACITY WITH A MINIMUM 12 INCHES OF FREEBOARD.

3.CONCRETE WASHOUT STRUCTURE NEEDS TO BE CLEARLY MARKED WITH SIGNAGE NOTING DEVICE.

BELOW GRADE WASHOUT STRUCTURE

NOT TO SCALE

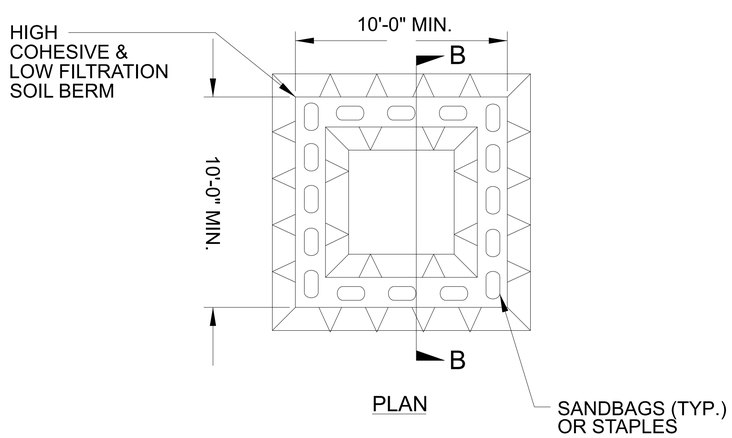

PLAN

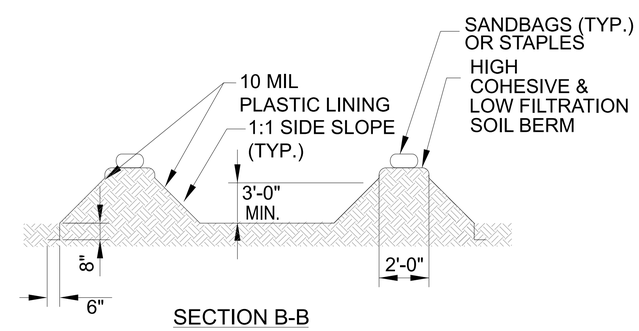

SECTION B-B

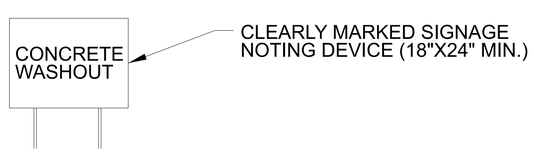

NOTES:
1. ACTUAL LOCATION DETERMINED IN FIELD

2. THE CONCRETE WASHOUT STRUCTURES SHALL BE MAINTAINED WHEN THE LIQUID AND/OR SOLID REACHES 75% OF THE STRUCTURES CAPACITY TO PROVIDE ADEQUATE HOLDING CAPACITY WITH A MINIMUM 12 INCHES OF FREEBOARD.

3.CONCRETE WASHOUT STRUCTURE NEEDS TO BE CLEARLY MARKED WITH SIGNAGE NOTING DEVICE.

ABOVE GRADE WASHOUT STRUCTURE

NOT TO SCALE

PROJECT REFERENCE NO.	SHEET NO.
BP9-R002	EC-3

DIVISION OF HIGHWAYS
STATE OF NORTH CAROLINA

SOIL STABILIZATION SUMMARY SHEET

MATTING FOR EROSION CONTROL (FILL SLOPE)

CONST SHEET NO.	LINE	FROM STATION	TO STATION	SIDE	ESTIMATE (SY)
4	-L-	16+50	18+15	LT	420
			SUBTOTAL FOR MATTING		420
	MISCELLANEOUS MATTING TO BE INSTALLED AS DIRECTED BY THE ENGINEER				500
				TOTAL	920
				SAY	970

MATTING FOR EROSION CONTROL (DITCHES)

CONST SHEET NO.	LINE	FROM STATION	TO STATION	SIDE	ESTIMATE (SY)

PROJECT REFERENCE NO.	SHEET NO.
BP9-R002	EC-3A

DIVISION OF HIGHWAYS
STATE OF NORTH CAROLINA

SOIL STABILIZATION TIMEFRAMES

SITE DESCRIPTION	STABILIZATION TIME	TIMEFRAME EXCEPTIONS
PERIMETER DIKES, SWALES, DITCHES AND SLOPES	7 DAYS	NONE
HIGH QUALITY WATER (HQW) ZONES	7 DAYS	NONE
SLOPES STEEPER THAN 3:1	7 DAYS	IF SLOPES ARE 10' OR LESS IN LENGTH AND ARE NOT STEEPER THAN 2:1, 14 DAYS ARE ALLOWED.
SLOPES 3:1 TO 4:1	14 DAYS	7 DAYS FOR SLOPES GREATER THAN 50' IN LENGTH WITH SLOPES STEEPER THAN 4:1. 7 DAYS FOR PERIMETER DIKES, SWALES, DITCHES PERIMETER SLOPES, AND HQW ZONES
ALL OTHER AREAS WITH SLOPES FLATTER THAN 4:1	14 DAYS	7 DAYS FOR PERIMETER DIKES, SWALES, DITCHES PERIMETER SLOPES, AND HQW ZONES

5/26/20

CLEARING & GRUBBING
EROSION CONTROL FOR
CONSTRUCTION SHEET 4

NOTE:
PLACE TEMPORARY ROCK SEDIMENT DAMS TYPE - B AND TEMPORARY ROCK SILT CHECKS TYPE - A AT DRAINAGE OUTLETS.

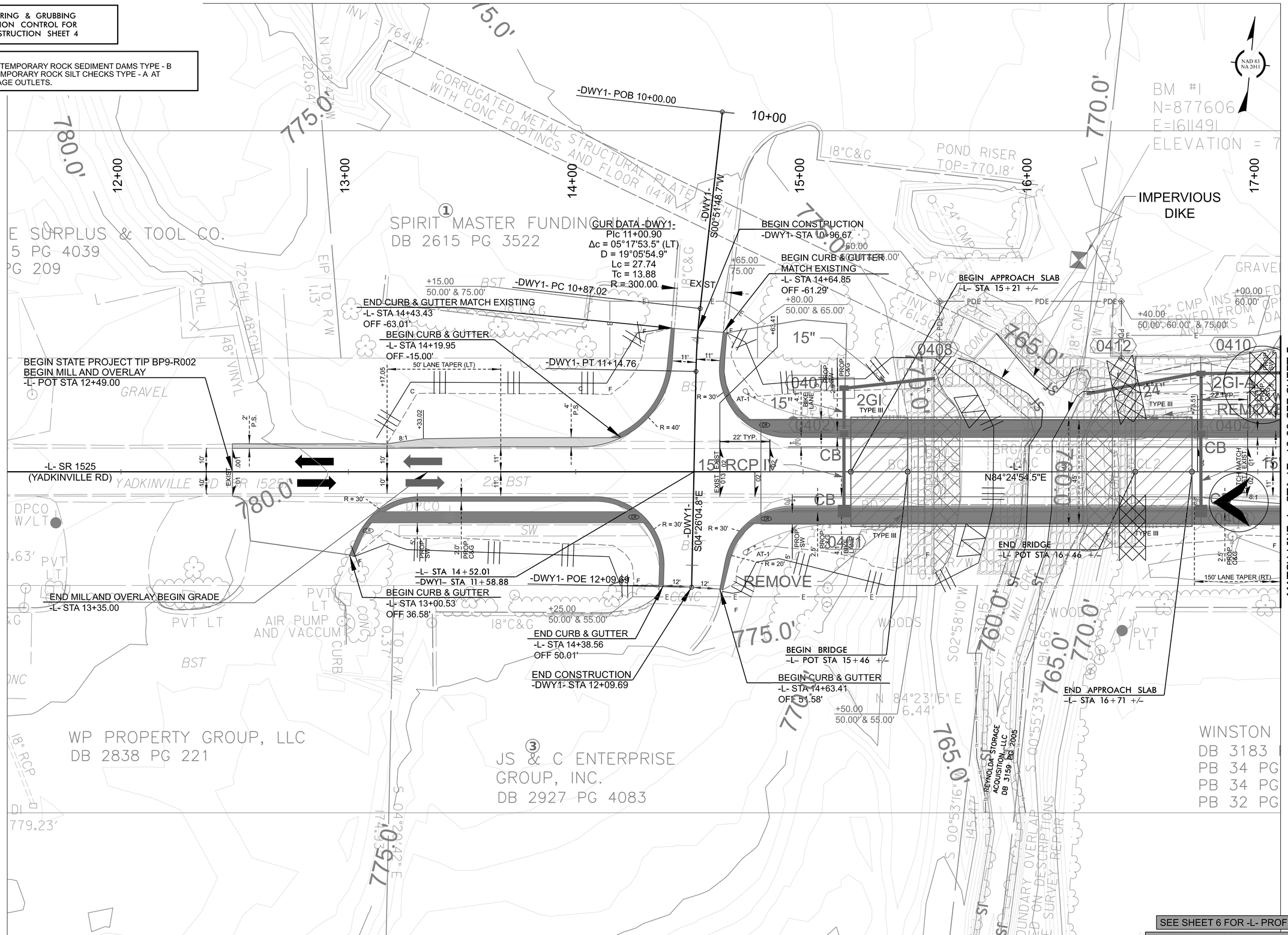

BP9-R002

EC-4	CONST.4

NORTH CAROLINA
DEPARTMENT OF TRANSPORTATION
FORSYTH COUNTY

PREPARED BY
STV Engineers, Inc.
900 West Trade St., Suite 715
Charlotte, NC 28202
NC License Number F-0991

REVISIONS

5/26/20

CLEARING & GRUBBING
EROSION CONTROL FOR
CONSTRUCTION SHEET 5

NOTE:
PLACE TEMPORARY ROCK SEDIMENT DAMS TYPE - B AND TEMPORARY ROCK SILT CHECKS TYPE - A AT DRAINAGE OUTLETS.

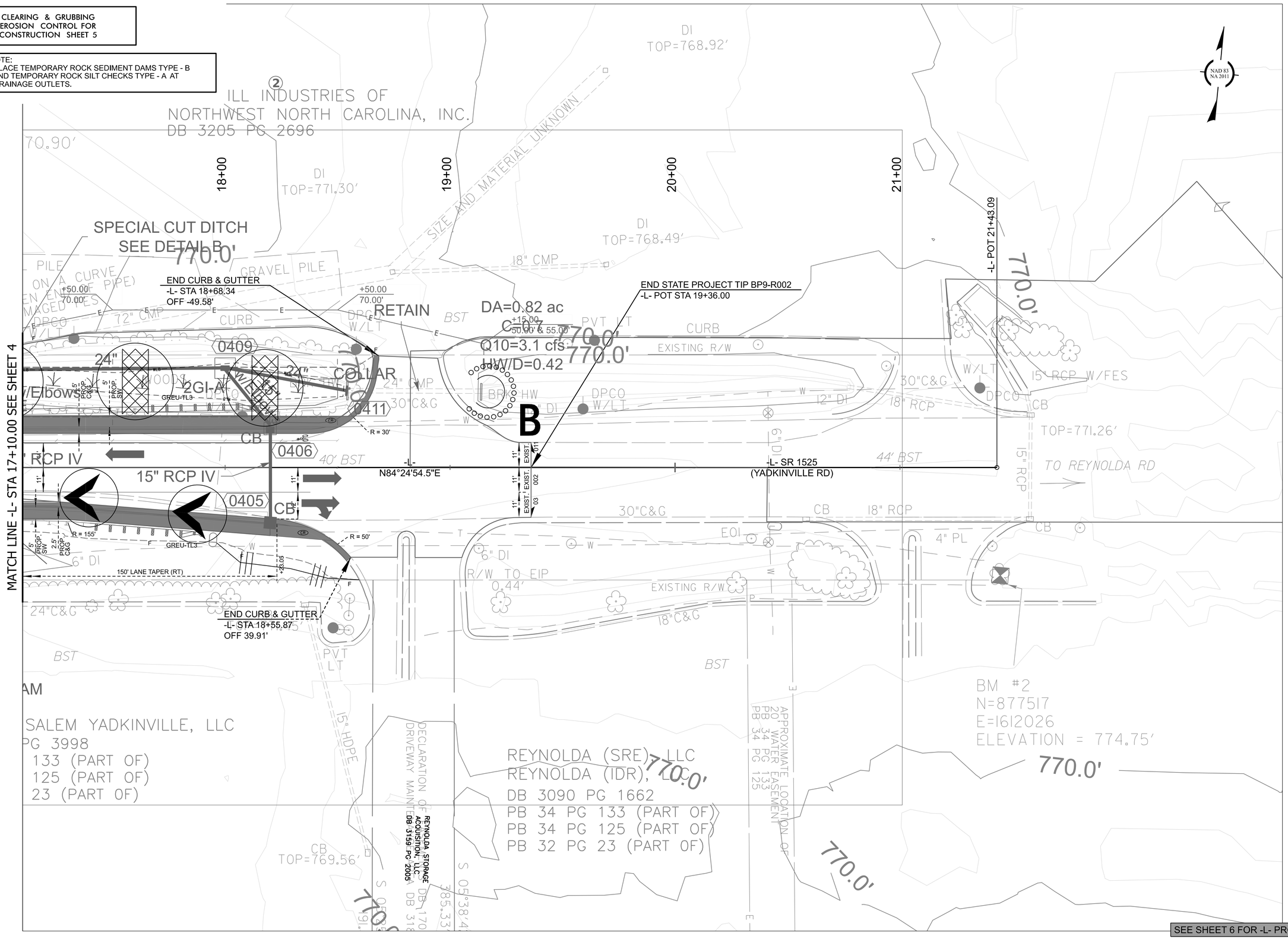

SEE SHEET 6 FOR -L- PROFILE VIEW

BP9-R002

EC-5	CONST.5

NORTH CAROLINA
DEPARTMENT OF TRANSPORTATION
FORSYTH COUNTY

PREPARED BY
STV Engineers, Inc.
900 West Trade St., Suite 715
Charlotte, NC 28202
NC License Number F-0991

REVISIONS

NORTH CAROLINA
DEPARTMENT OF TRANSPORTATION
FORSYTH COUNTY

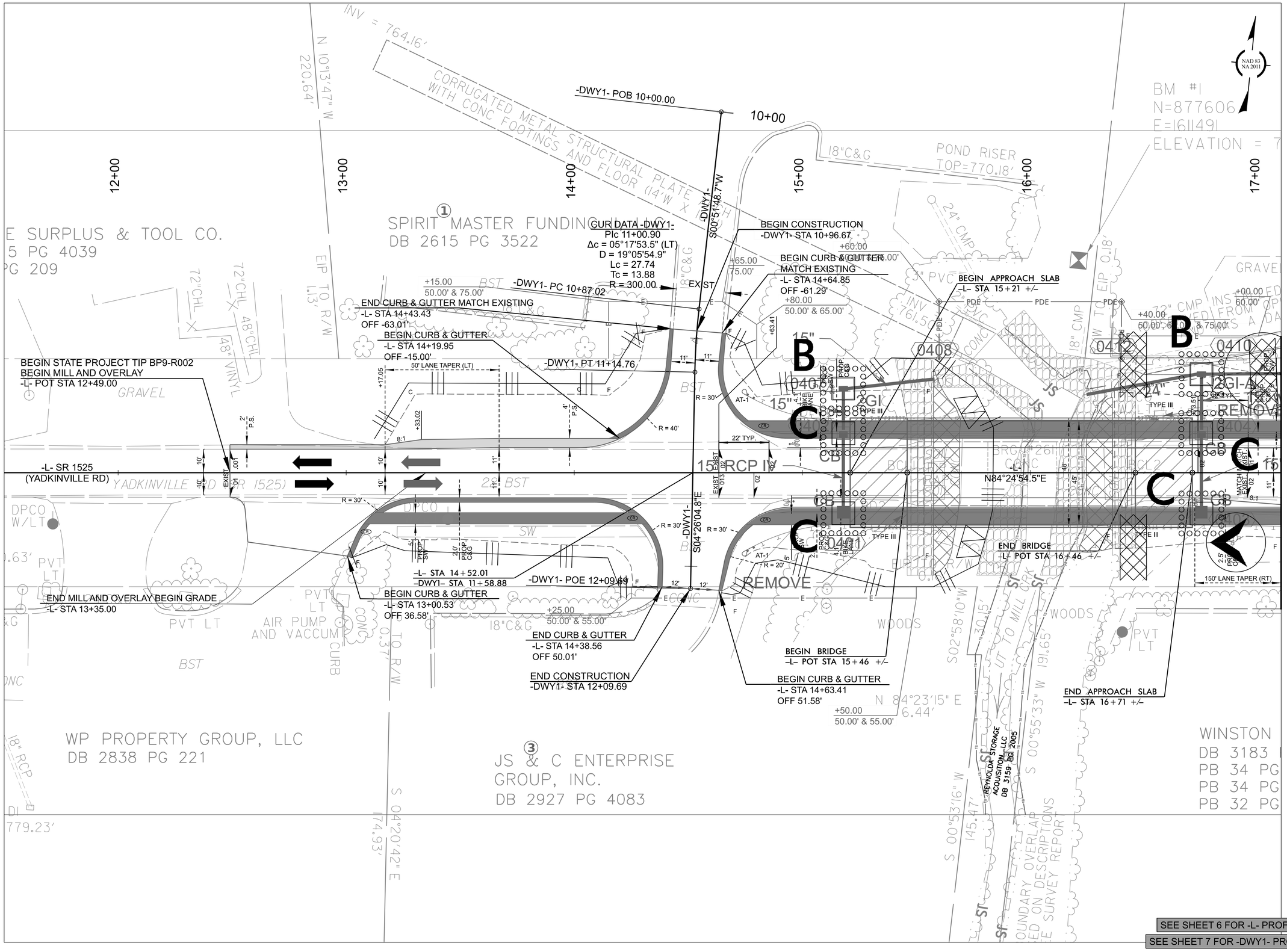

PREPARED BY
STV Engineers, Inc.
900 West Trade St., Suite 715
Charlotte, NC 28202
NC License Number F-0991

REVISIONS

5/26/20

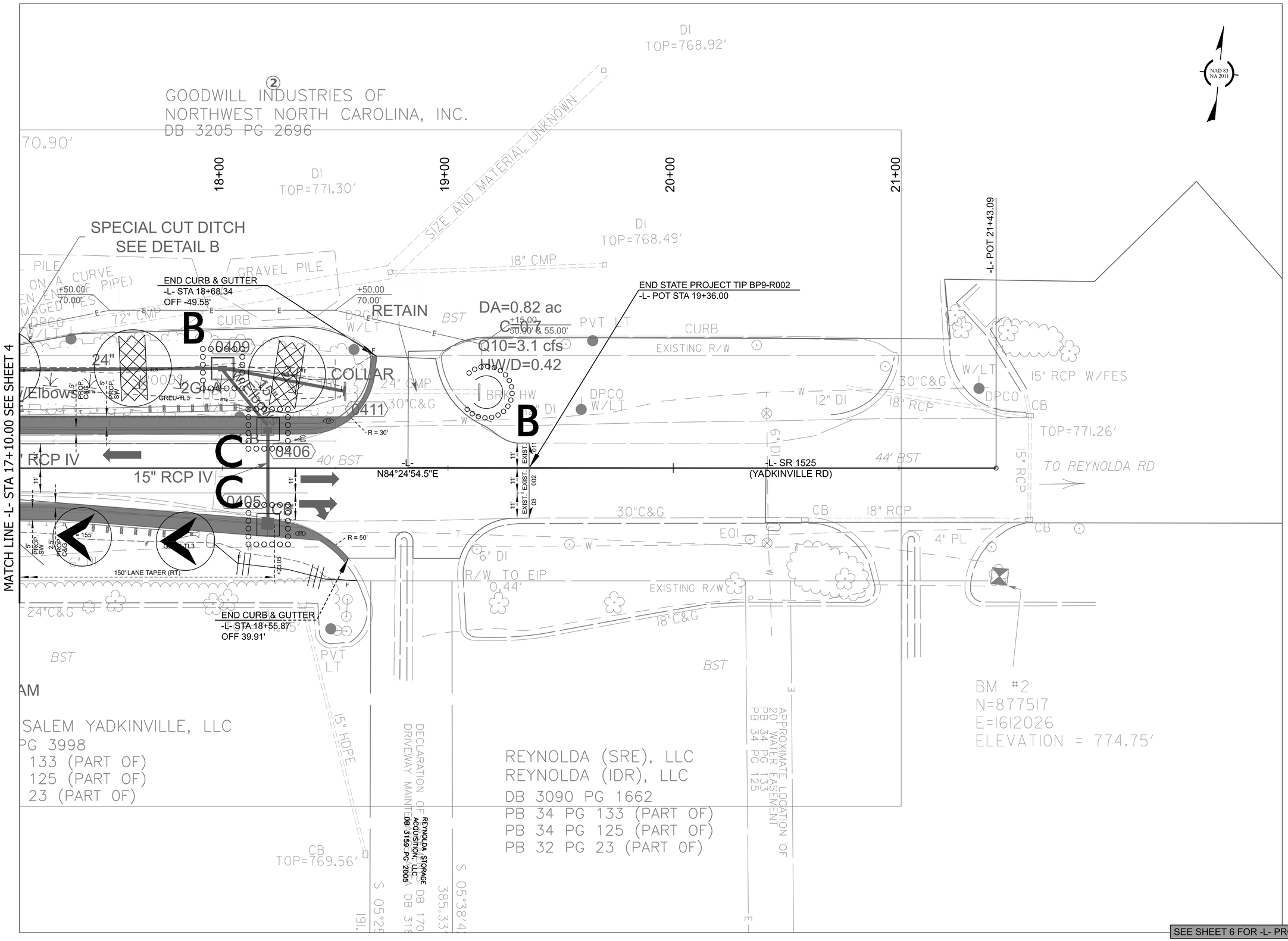

BP9-R002

EC-7 | CONST.5

NORTH CAROLINA
DEPARTMENT OF TRANSPORTATION
FORSYTH COUNTY

PREPARED BY
STV Engineers, Inc.
900 West Trade St., Suite 715
Charlotte, NC 28202
NC License Number F-0991

REVISIONS

5/26/20

10/28/24

TIP PROJECT: BP9-R002

STATE OF NORTH CAROLINA
DIVISION OF HIGHWAYS

T.I.P. NO.	SHEET NO.
BP9–R002	UO–1

NOTE:
ALL UTILITY WORK SHOWN ON THIS SHEET WILL BE DONE BY OTHERS. NO PAYMENT WILL BE MADE TO THE CONTRACTOR FOR UTILITY WORK SHOWN ON THIS SHEET.

UTILITIES BY OTHERS PLANS
FORSYTH COUNTY

LOCATION: BRIDGE NO. 330261 ON SR 1525 (YADKINVILLE RD) OVER UT TO MILL CREEK

TYPE OF WORK: Communications (Distribution), Power (Light Poles), Water (Distribution)

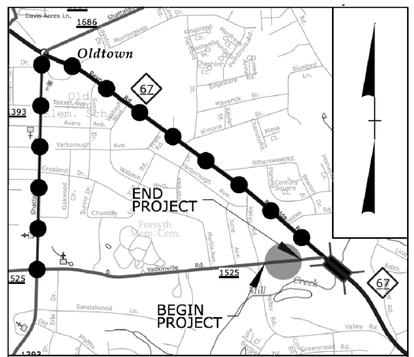

VICINITY MAP (NTS)

NAD 83
NA 2011

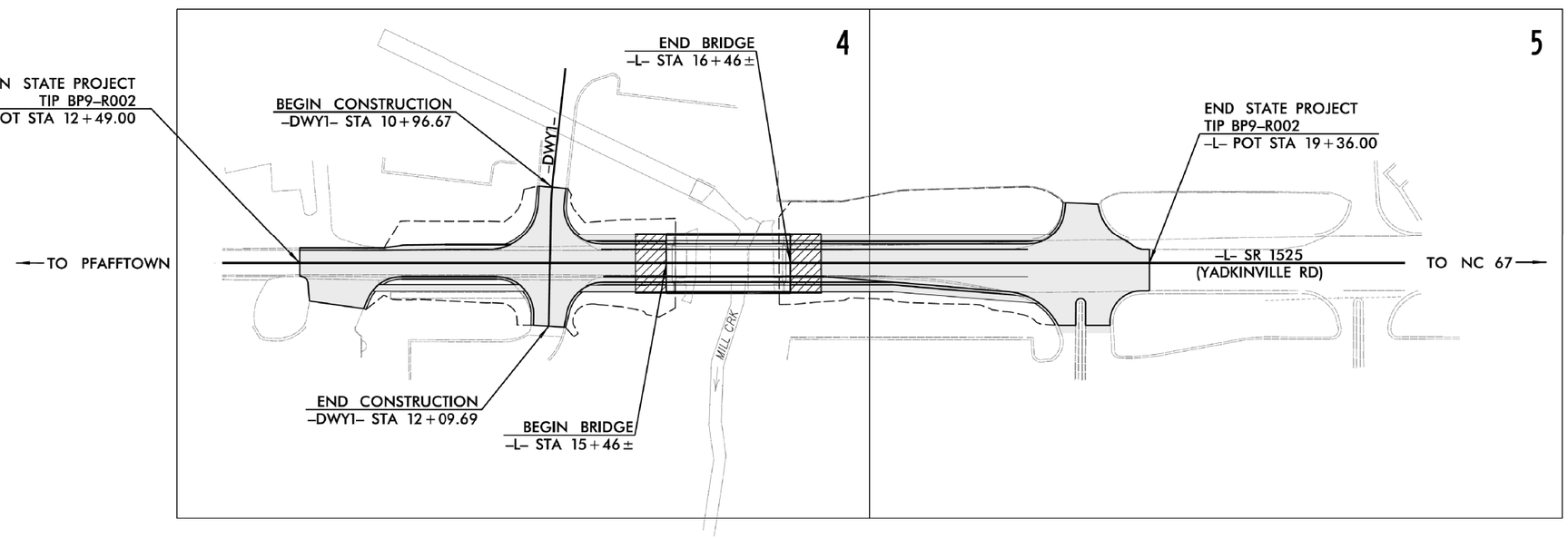

GRAPHIC SCALES

20 10 0 20 40
PLANS

INDEX OF SHEETS

SHEET NO.:	*DESCRIPTION:*
UC–1	*TITLE SHEET*
UC–4 THRU UC–5	*UTILITY CONSTRUCTION SHEETS*

UTILITY OWNERS WITH CONFLICTS

Communications:
Segra — *Travis Bowman: travis.bowman@segra.com*
Verizon/MCI — *Pranavkumar Amin: 916–597–3069*
Windstream — *Mike Greco: mike.greco@gokinetic.com*
Lumos — *Brad Hudson: brad.hudson@lumosfiber.com*

Power:
Duke Energy — *Patrick Sizemore: patrick.sizemore@duke–energy.com*

Water:
City of Winston Salem — *Todd Lewis: toddl@cityofws.com*

DIVISION OF HIGHWAYS
DIVISION 9
375 SILAS CREEK PARKWAY
WINSTON SALEM, NC 27127

Jeremy L. Keaton, PE, PLS — *BRIDGE PROGRAM MGR.*
Josh McMahan — *DIV. UTILITIES ENGINEER*
Lou Porter — *DIV. UTILITIES COORDINATOR*

5/26/20

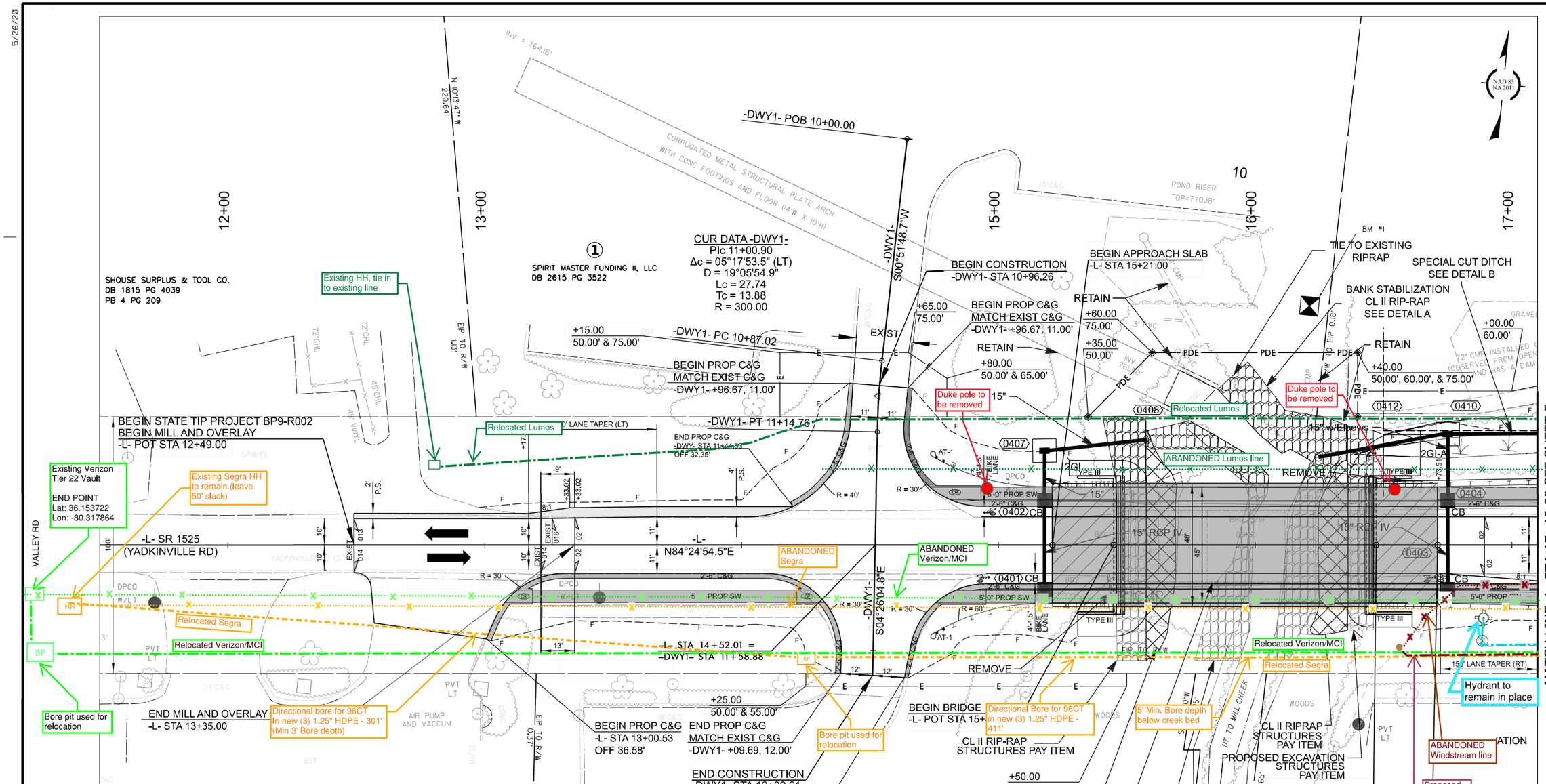

LEGEND AND NOTES

Lumos
Relocated approximately 660' of 2" HDPE Conduit, 720' of Fiber Optic cable and (1) - 24x36x24 Hand Hole. New line takes a path behind Structure 0409 running the RW line and tying into an existing Hand Hole at a depth of 3-5'. Old Lumos line abandoned as shown but line and old hand hole remains.

Segra
Relocated approximately 912' of (3) new 1.25" HDPE conduits installed via directional bore at a minimum depth of 3' unless otherwise specified on the drawings to relocate existing 96 ct FO. Two existing hand holes will be kept in place to access and maintain cables. Old Lines to be abandoned as shown, but not removed.

Verizon/MCI
Relocated approximately 1300' of 2" HDPE SCH40 w/864 fiber at min. 3' depth (5' under roads and Creek Bed) via directional bore and/or trenching. Old Lines to be abandoned as shown, but not removed.

Windstream
Relocated approximately 172' of copper (50 pair) cable. Old Lines to be abandoned as shown. Old lines run in front of guard rail will not be removed but are abandoned.

Duke Power (w/COWS agreement)
Three light poles to be removed prior to construction. Call Duke and set up removal of Light poles 3 months prior to needing them removed.

City of Winston Salem
12" Waterline has been shortened (via plug) as shown. Remaining (abandoned) 12" has not been removed. Line is ~3-3 1/2' deep.

BP9-R002

UO-4

NORTH CAROLINA
DEPARTMENT OF TRANSPORTATION
FORSYTH COUNTY

PREPARED BY
NCDOT DIVISION 9
375 SILAS CREEK PARKWAY
WINSTON SALEM, NC 27127

REVISIONS

5/26/20

BP9-R002

UO-5

NORTH CAROLINA
DEPARTMENT OF TRANSPORTATION
FORSYTH COUNTY

PREPARED BY

NCDOT DIVISION 9
375 SILAS CREEK PARKWAY
WINSTON SALEM, NC 27127

REVISIONS

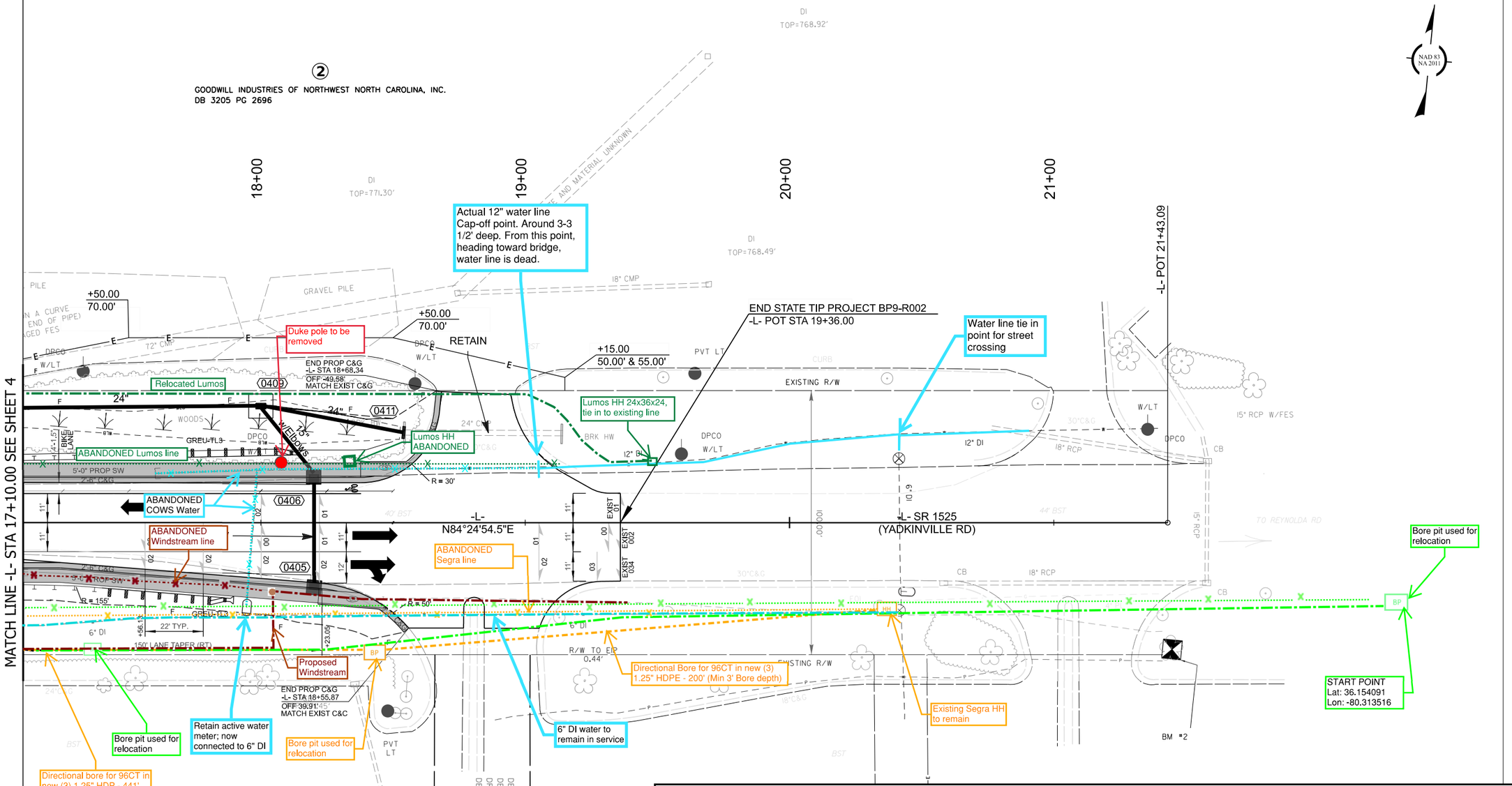

DETAIL B

SPECIAL CUT DITCH

(Not to Scale)

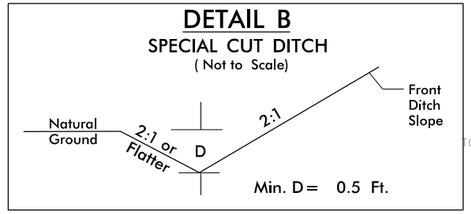

FROM STA. 16+50 TO STA. 18+50 –L– LT

LEGEND AND NOTES

Lumos

Relocated approximately 660' of 2" HDPE Conduit, 720' of Fiber Optic cable and (1) - 24x36x24 Hand Hole. New line takes a path behind Structure 0409 running the RW line and tying into an existing Hand Hole at a depth of 3-5'. Old Lumos line abandoned as shown but line and old hand hole remains.

Segra

Relocated approximately 912' of (3) new 1.25" HDPE conduits installed via directional bore at a minimum depth of 3' unless otherwise specified on the drawings to relocate existing 96 ct FO. Two existing hand holes will be kept in place to access and maintain cables. Old Lines to be abandoned as shown, but not removed.

Verizon/MCI

Relocated approximately 1300' of 2" HDPE SCH40 w/864 fiber at min. 3' depth (5' under roads and Creek Bed) via directional bore and/or trenching. Old Lines to be abandoned as shown, but not removed.

Windstream

Relocated approximately 172' of copper (50 pair) cable. Old Lines to be abandoned as shown. Old lines run in front of guard rail will not be removed but are abandoned.

Duke Power (w/COWS agreement)

Three light poles to be removed prior to construction. Call Duke and set up removal of Light poles 3 months prior to needing them removed.

City of Winston Salem

12" Waterline has been shortened (via plug) as shown. Remaining (abandoned) 12" has not been removed. Line is ~3-3 1/2' deep.

11/14/23

CROSS–SECTIONS INDEX OF SHEETS

CROSS-SECTION INDEX OF SHEETS ---------- X-1A

CROSS SECTION SUMMARY ---------- X-1B

-L- ---------- X-1 THRU X-7

-DWY1- ---------- X-8 THRU X-10

BP9-R002

X-1A

NORTH CAROLINA
DEPARTMENT OF TRANSPORTATION
FORSYTH COUNTY

ROADWAY DESIGN UNIT

PREPARED BY

STV Engineers, Inc.
2151 Hawkins Street, Suite 1400
Charlotte, NC 28203
NC License Number F-0991

DOCUMENT NOT CONSIDERED FINAL UNLESS ALL SIGNATURES COMPLETED

REVISIONS

STATE OF NORTH CAROLINA
DIVISION OF HIGHWAYS

PROJ. REFERENCE NO.	SHEET NO.
BP9-R002	X-1B

Note: Approximate quantities only. Unclassified excavation, borrow excavation, fine grading, clearing and grubbing, and removal of existing pavement will be paid for at the contract lump sum price for Grading.

NOTE: EMBANKMENT COLUMN INCLUDES BACKFILL FOR UNDERCUT

CROSS-SECTION SUMMARY

Station L	Uncl. Exc. (cu. yd.)	Embt (cu. yd.)
12+49.00	0	0.0
12+50.00	0.1	0.0
13+00.00	4.1	0.0
13+50.00	10.9	12.1
14+00.00	14.4	29.9
14+50.00	5.5	18.1
15+00.00	0.0	57.1
15+44.88	0.0	51.0

Station Driveway1	Uncl. Exc. (cu. yd.)	Embt (cu. yd.)
10+96.26	0	0
11+00.00	4.1	0.2
11+43.38	23.9	1.4
11+74.38	0.0	0.0
12+00.00	13.9	5.5
12+09.61	10.8	3.6

Station L	Uncl. Exc. (cu. yd.)	Embt (cu. yd.)
16+47.13	0	0
16+50.00	0.0	7.9
17+00.00	0.8	223.1
17+50.00	4.9	177.6
18+00.00	14.9	173.7
18+50.00	18.9	136.2
19+00.00	8.1	53.8
19+36.00	0	0

DOCUMENT NOT CONSIDERED FINAL
UNLESS ALL SIGNATURES COMPLETED

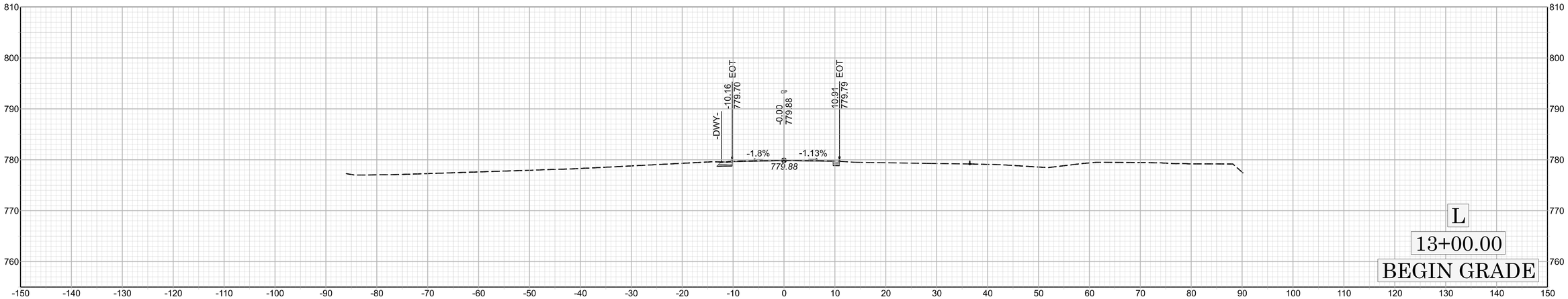

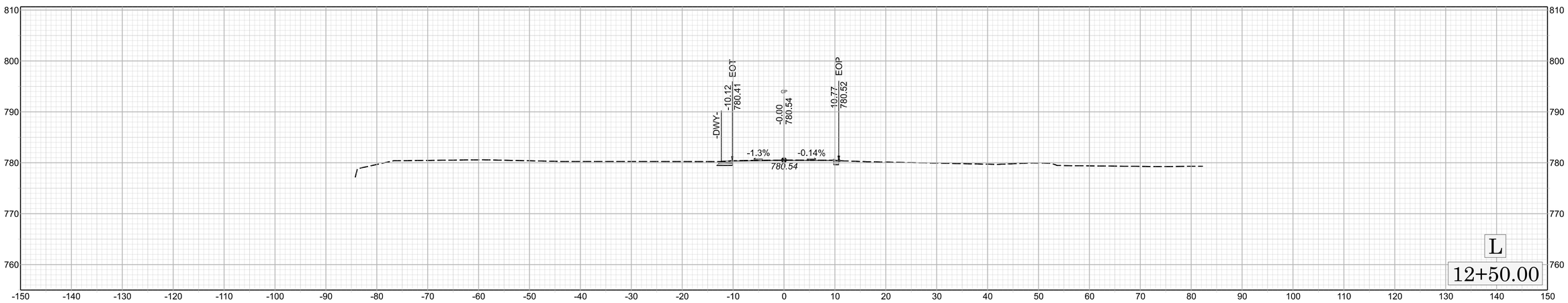

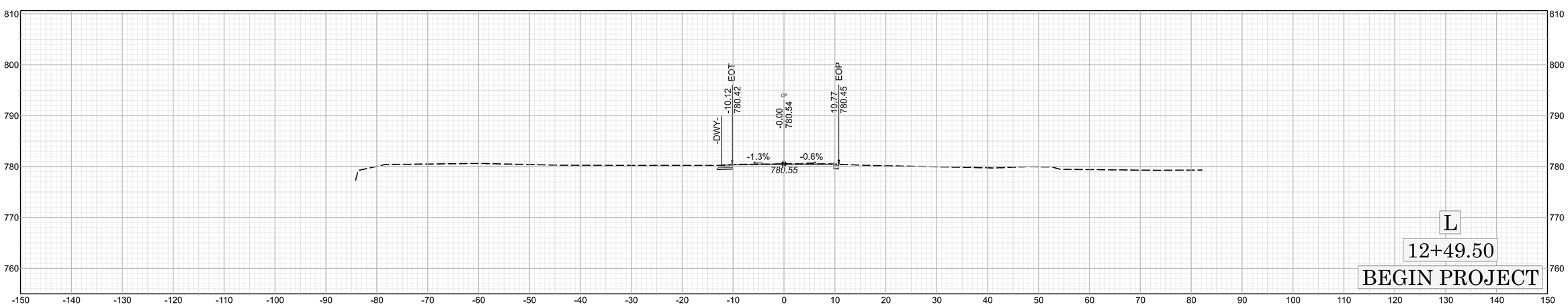

X 1

BP9-R002

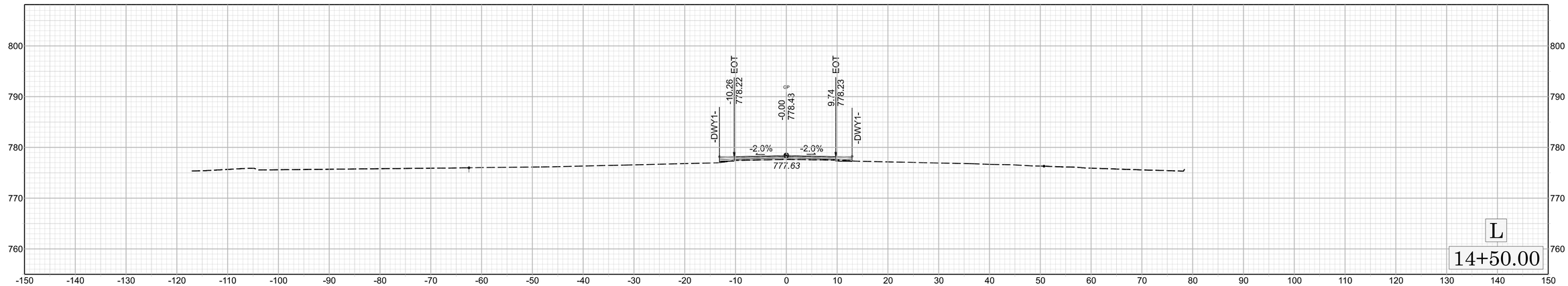
-DWY1-
-10.26
EOT
778.22
-0.00
φ
778.43
9.74
EOT
778.23
-DWY1-
-2.0%
-2.0%
777.63
L
14+50.00

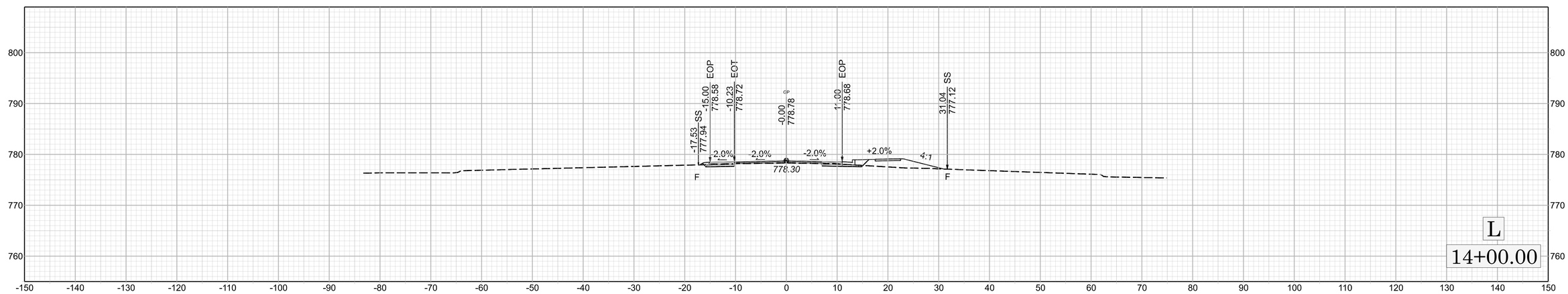
-17.53
SS
777.94
-15.00
EOP
778.58
-10.23
EOT
778.72
-0.00
φ
778.78
11.00
EOP
778.68
31.04
SS
777.12
-2.0%
-2.0%
-2.0%
+2.0%
4:1
778.30
F
F
L
14+00.00

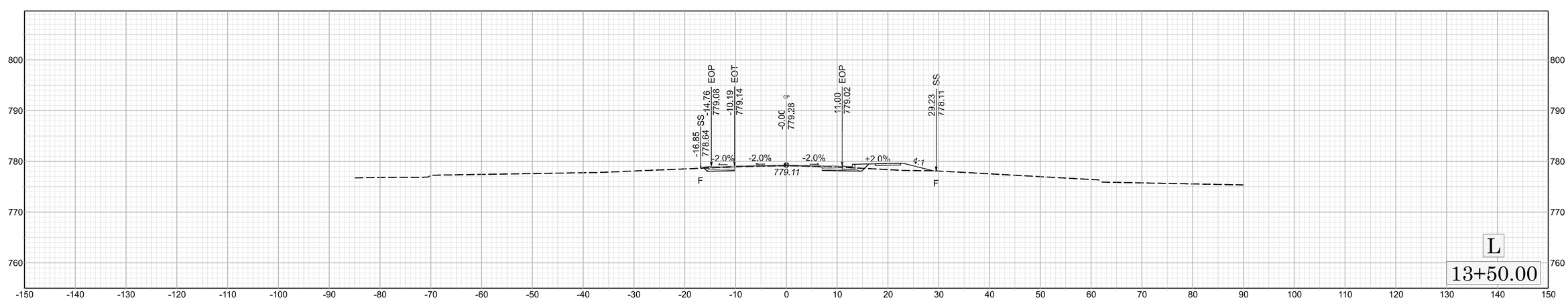
-16.85
SS
778.64
-14.76
EOP
779.08
-10.19
EOT
779.14
-0.00
φ
779.28
11.00
EOP
779.02
29.23
SS
778.11
-2.0%
-2.0%
-2.0%
+2.0%
4:1
779.11
F
F
L
13+50.00

2

BP9-R002

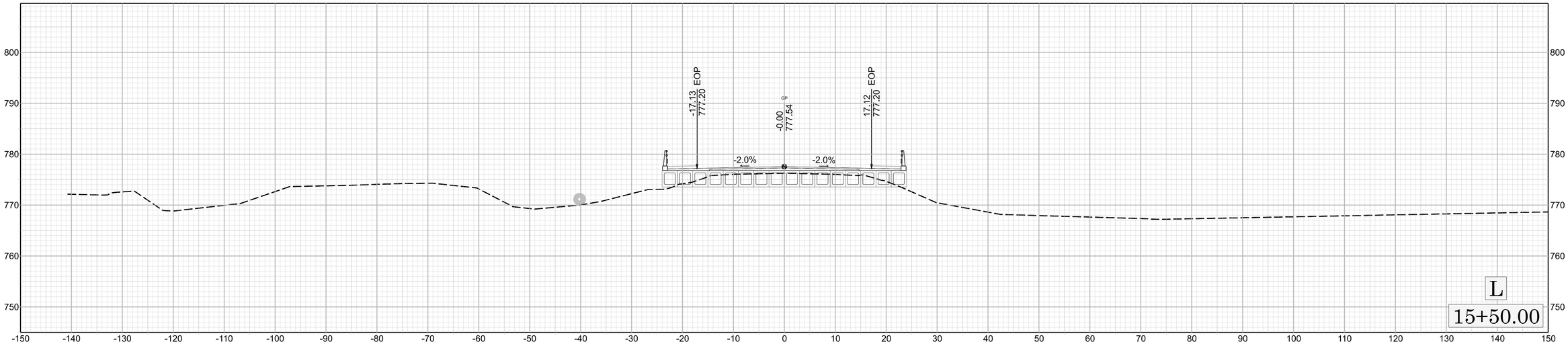
-17.13 EOP
777.20
-0.00
777.54
17.12 EOP
777.20
-2.0%
-2.0%
L
15+50.00

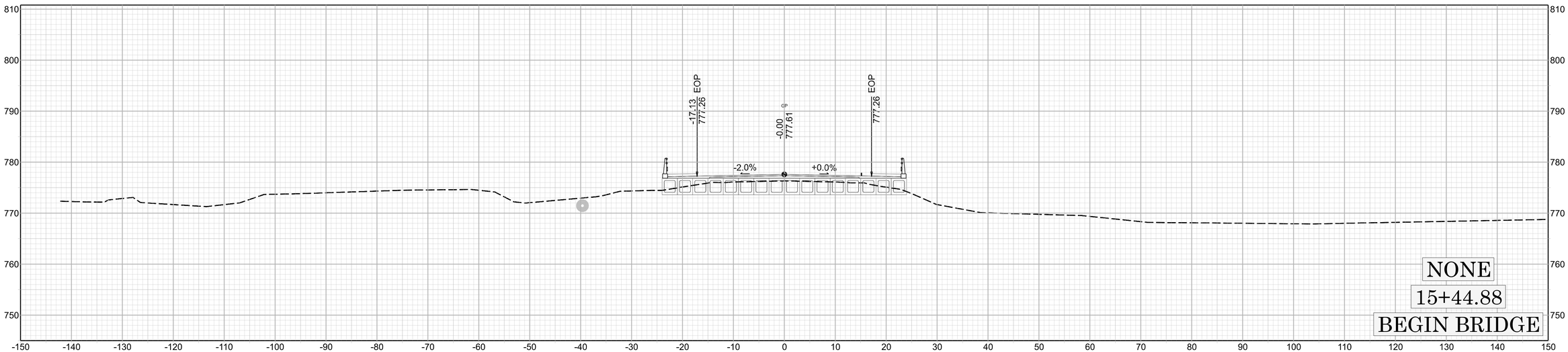
-17.13 EOP
777.26
-0.00
777.61
777.26 EOP
-2.0%
+0.0%
NONE
15+44.88
BEGIN BRIDGE

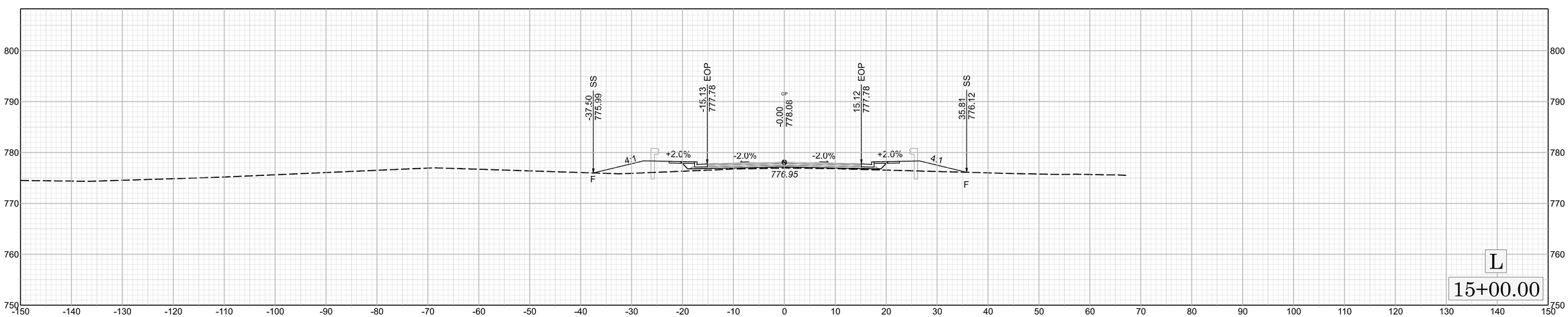
-37.50 SS
775.99
-15.13 EOP
777.78
-0.00
778.08
15.12 EOP
777.78
35.81 SS
776.12
4:1
+2.0%
-2.0%
-2.0%
+2.0%
4:1
776.95
F
F
L
15+00.00

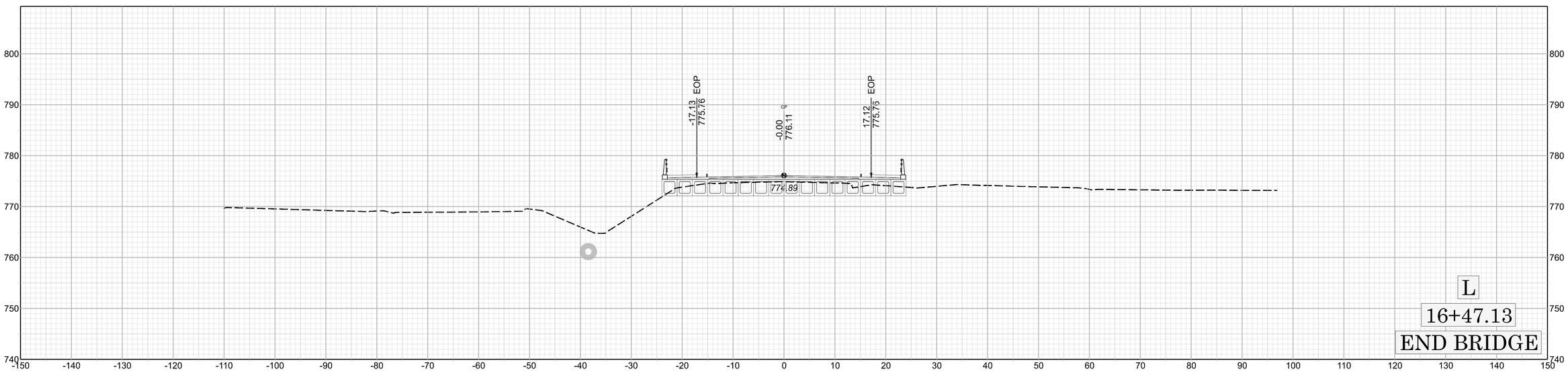
-17.13
775.76
EOP
-0.00
776.11
17.12
775.76
EOP
774.89
L
16+47.13
END BRIDGE

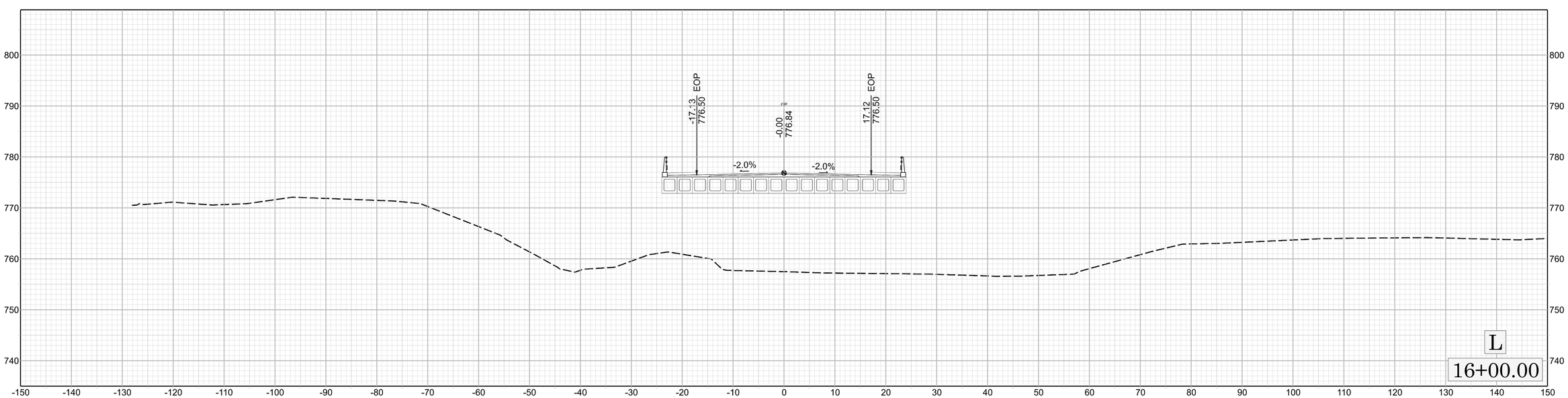
-17.13
776.50
EOP
-0.00
776.84
17.12
776.50
EOP
-2.0%
-2.0%
L
16+00.00

BP9-R002

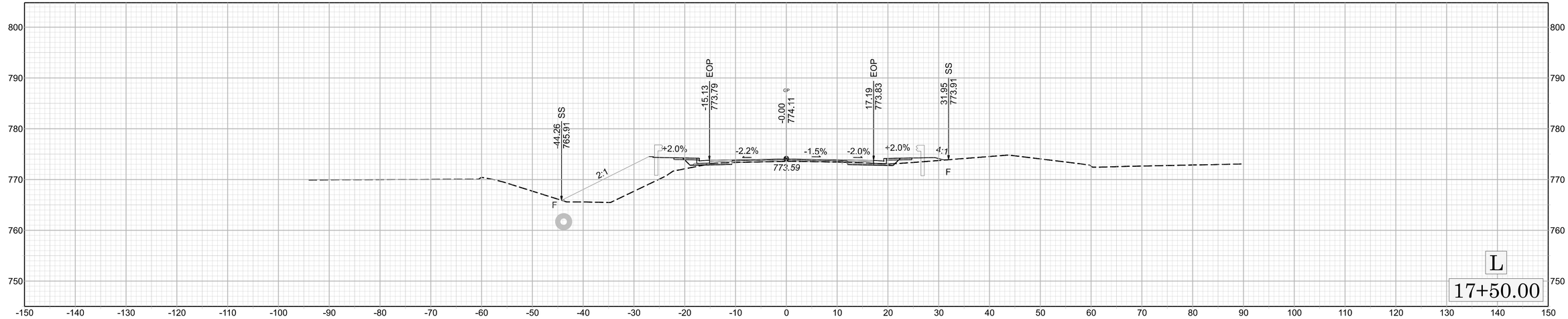
-44.26 SS
765.91
-15.13 EOP
773.79
-0.00
774.11
17.19 EOP
773.83
31.95 SS
773.91
+2.0%
-2.2%
-1.5%
-2.0%
+2.0%
2:1
4:1
773.59
F
L
17+50.00

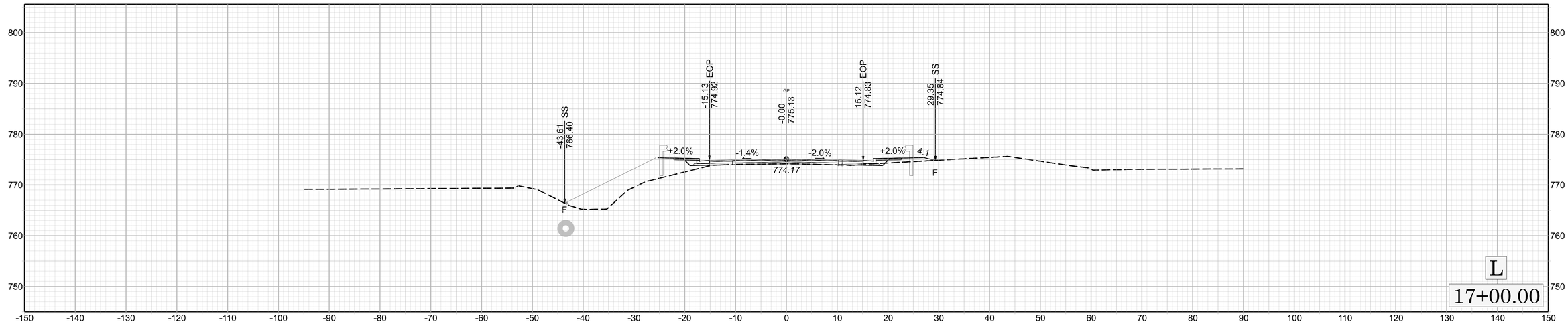
-43.61 SS
766.40
-15.13 EOP
774.92
-0.00
775.13
15.12 EOP
774.83
29.35 SS
774.84
+2.0%
-1.4%
-2.0%
+2.0%
4:1
774.17
F
L
17+00.00

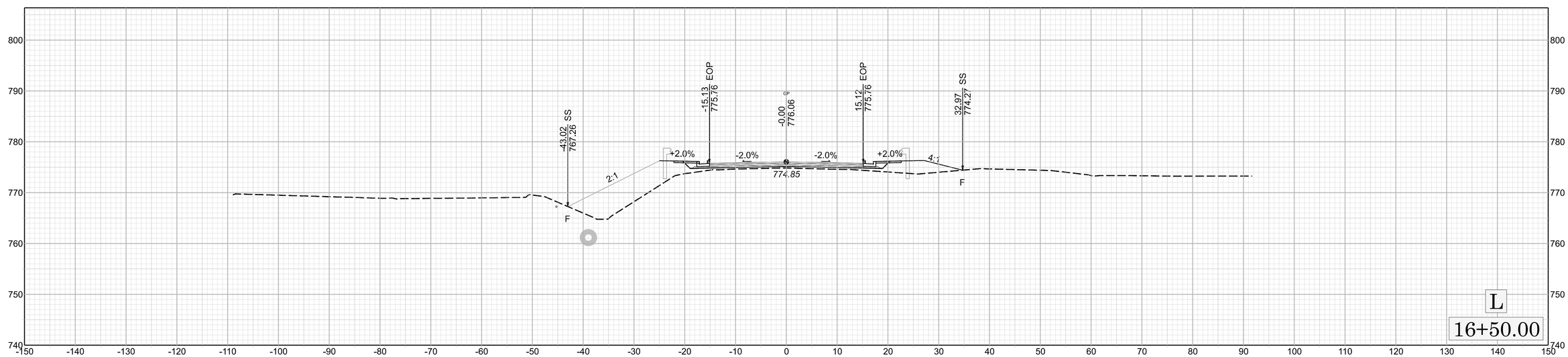
-43.02 SS
767.26
-15.13 EOP
775.76
-0.00
776.06
15.12 EOP
775.76
32.97 SS
774.27
+2.0%
-2.0%
-2.0%
+2.0%
2:1
4:1
774.85
F
L
16+50.00

BP9-R002

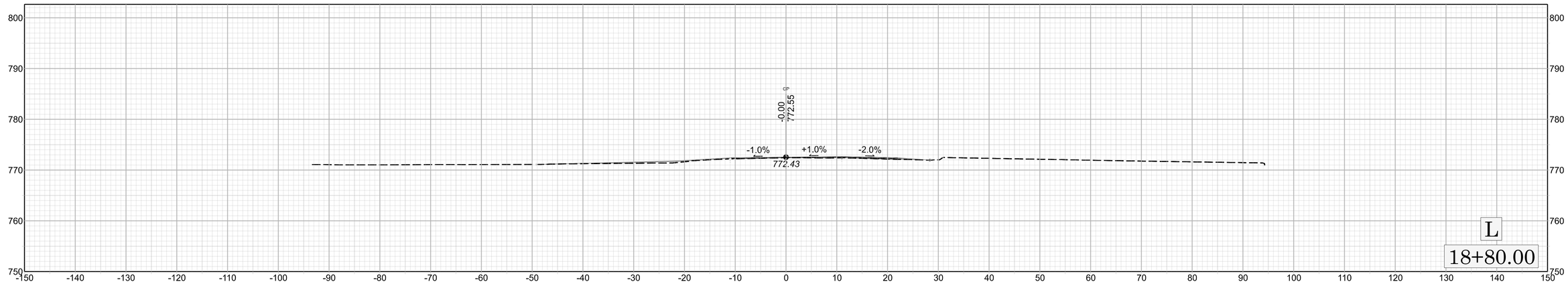
-0.00
772.55
-1.0%
+1.0%
-2.0%
772.43
L
18+80.00

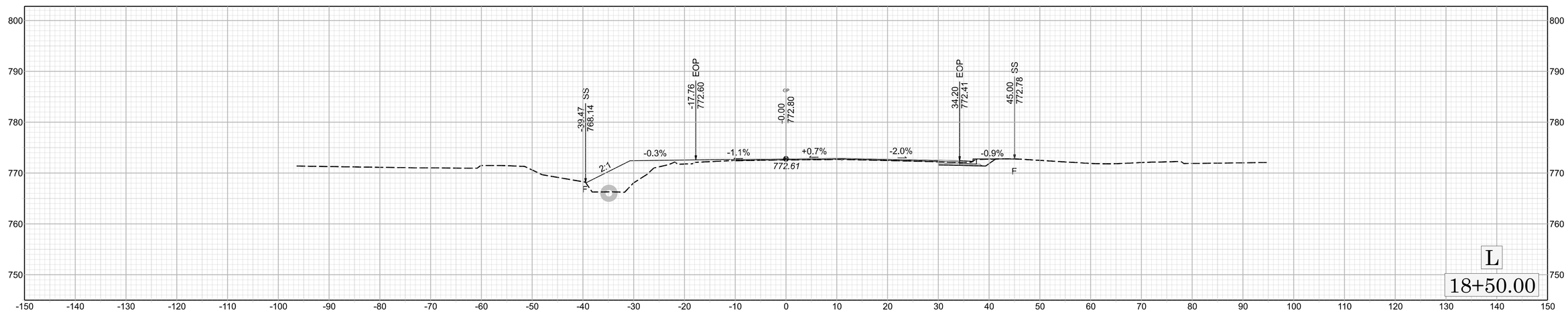
-39.47
768.14
SS
-17.76
772.60
EOP
-0.00
772.80
34.20
772.41
EOP
45.00
772.78
SS
-0.3%
-1.1%
+0.7%
-2.0%
-0.9%
2:1
772.61
L
18+50.00

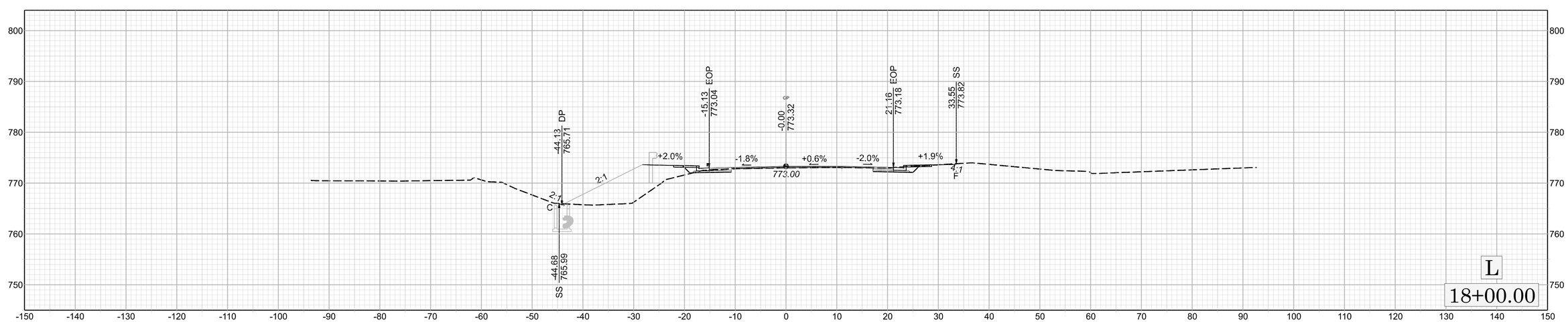
-44.13
765.71
DP
-15.13
773.04
EOP
-0.00
773.32
21.16
773.18
EOP
33.55
773.82
SS
+2.0%
-1.8%
+0.6%
-2.0%
+1.9%
2:1
4:1
773.00
-44.68
765.99
SS
L
18+00.00

6

BP9-R002

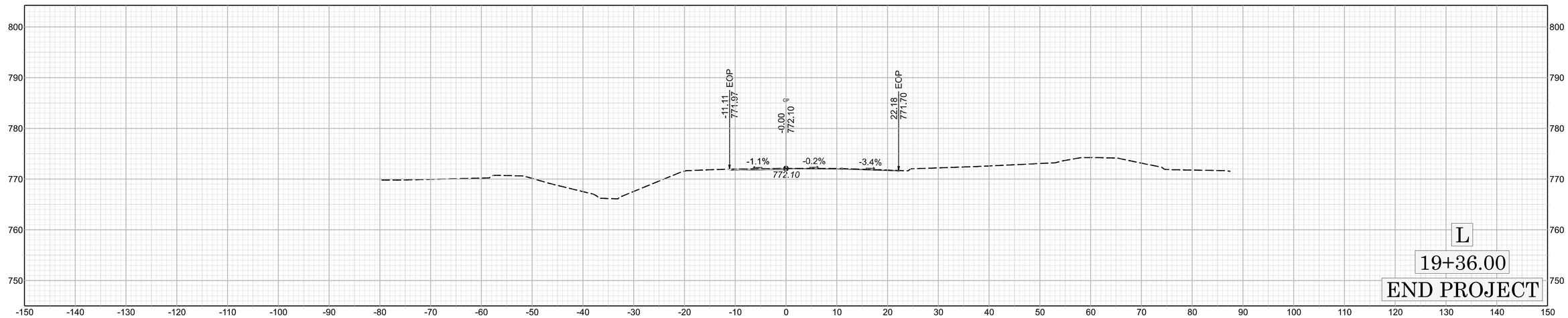
-11.11 EOP
771.97
-0.00 ℄
772.10
22.18 EOP
771.70
-1.1%
-0.2%
-3.4%
772.10
L
19+36.00
END PROJECT

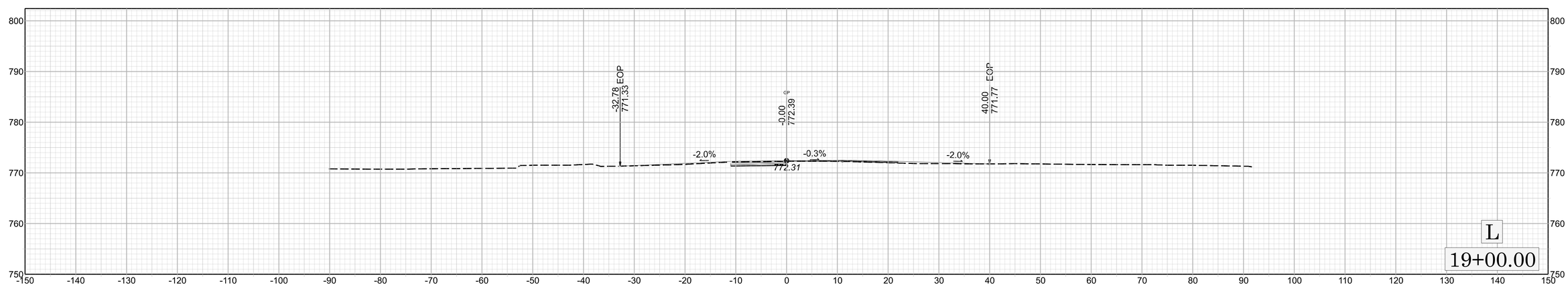
-32.78 EOP
771.33
-0.00 ℄
772.39
40.00 EOP
771.77
-2.0%
-0.3%
-2.0%
772.31
L
19+00.00

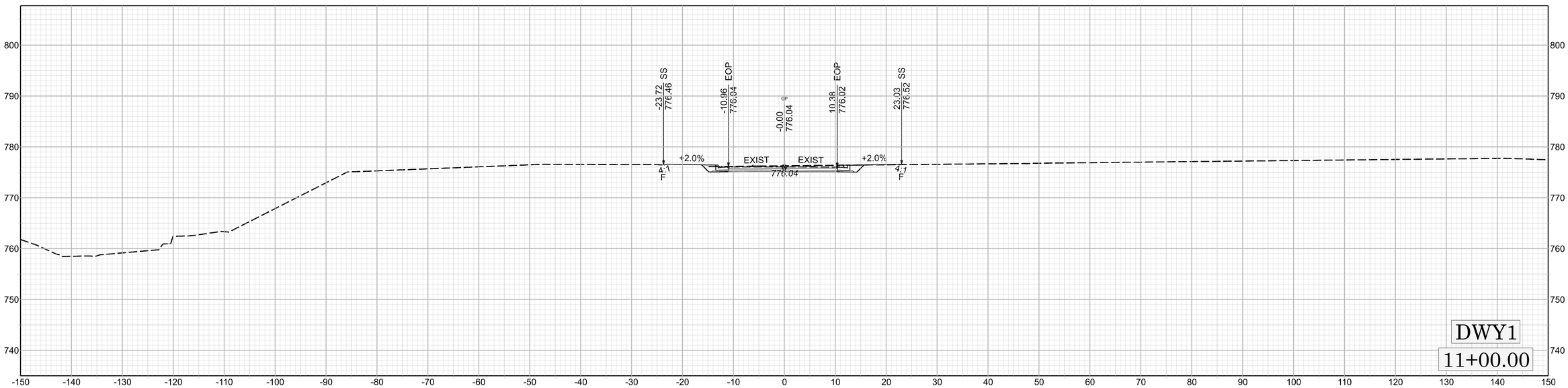
-23.72
776.46
SS
-10.96
776.04
EOP
-0.00
776.04
10.38
776.02
EOP
23.03
776.52
SS
+2.0%
EXIST
EXIST
+2.0%
4:1
4:1
776.04
DWY1
11+00.00

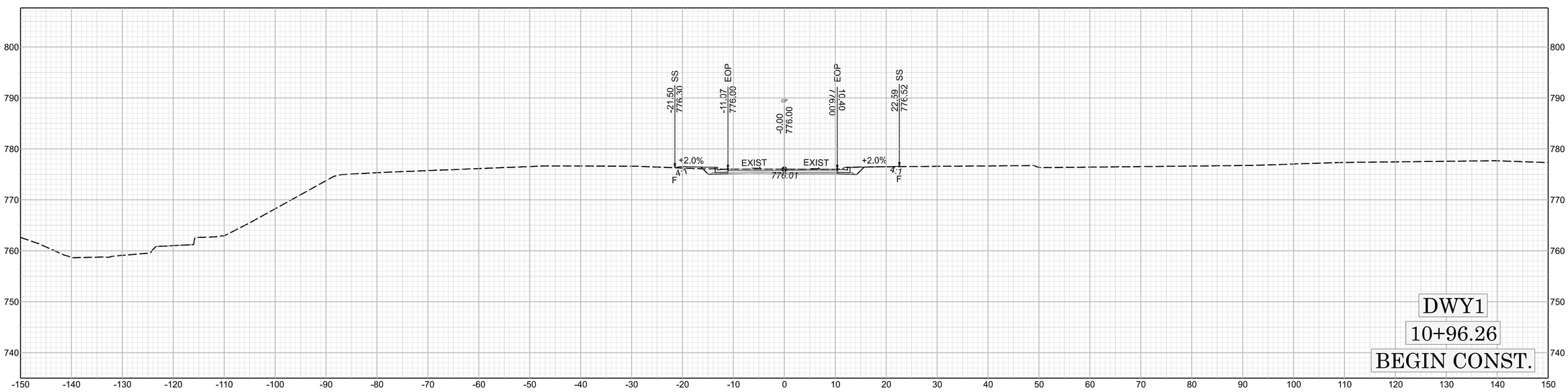
-21.50
776.30
SS
-11.07
776.00
EOP
-0.00
776.00
10.40
776.00
EOP
22.59
776.52
SS
+2.0%
EXIST
EXIST
+2.0%
4:1
F
4:1
F
776.01
DWY1
10+96.26
BEGIN CONST.

BP9-R002

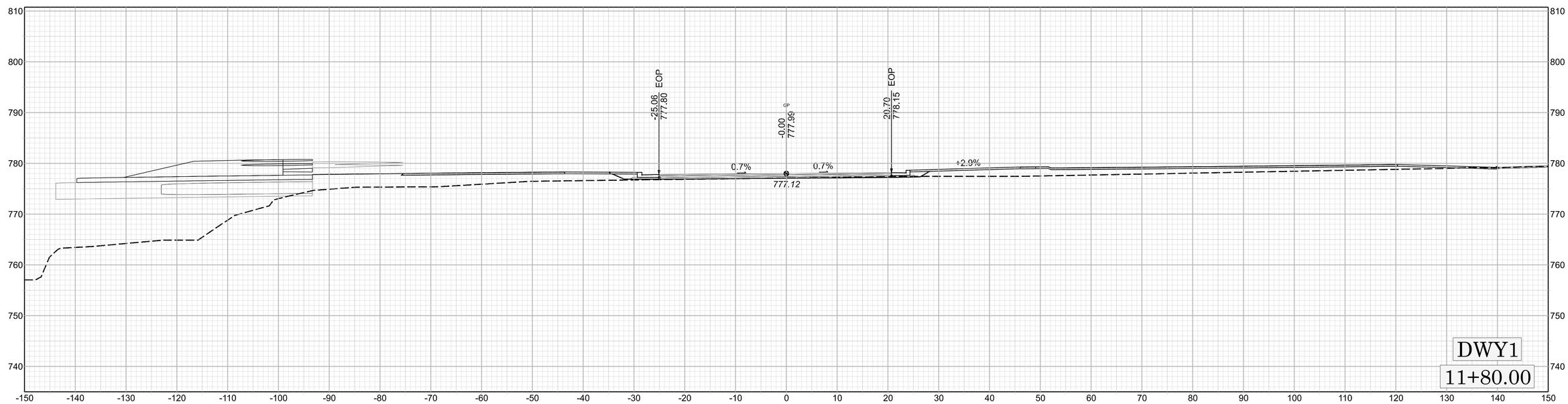
-25.06
EOP
777.80
-0.00
℄
777.99
20.70
EOP
778.15
0.7%
0.7%
+2.9%
777.12
DWY1
11+80.00

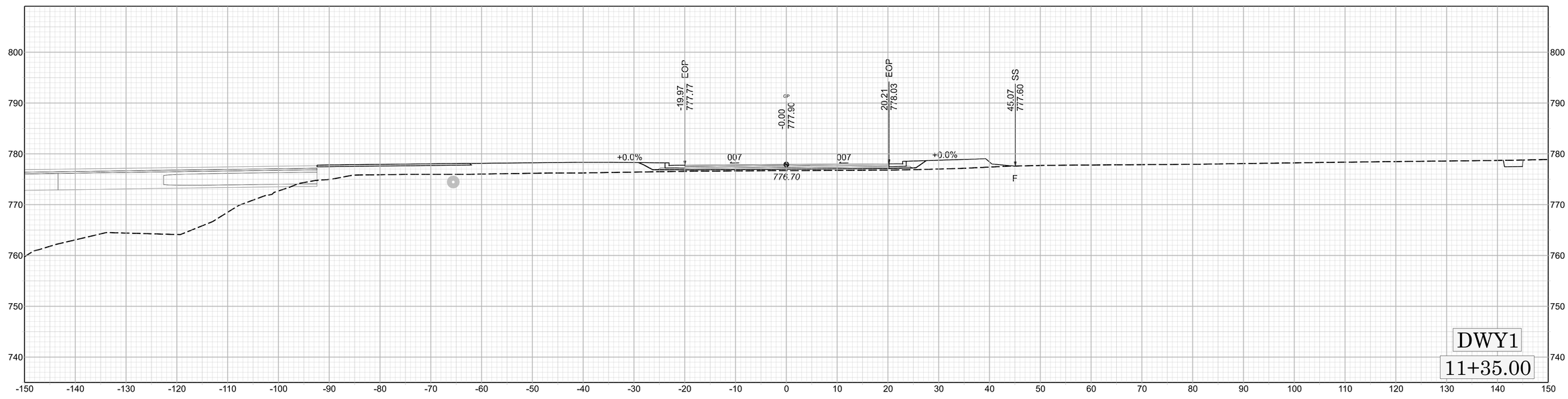
-19.97
EOP
777.77
-0.00
℄
777.90
20.21
EOP
778.03
45.07
SS
777.60
+0.0%
007
007
+0.0%
776.70
F
DWY1
11+35.00

BP9-R002

X 9

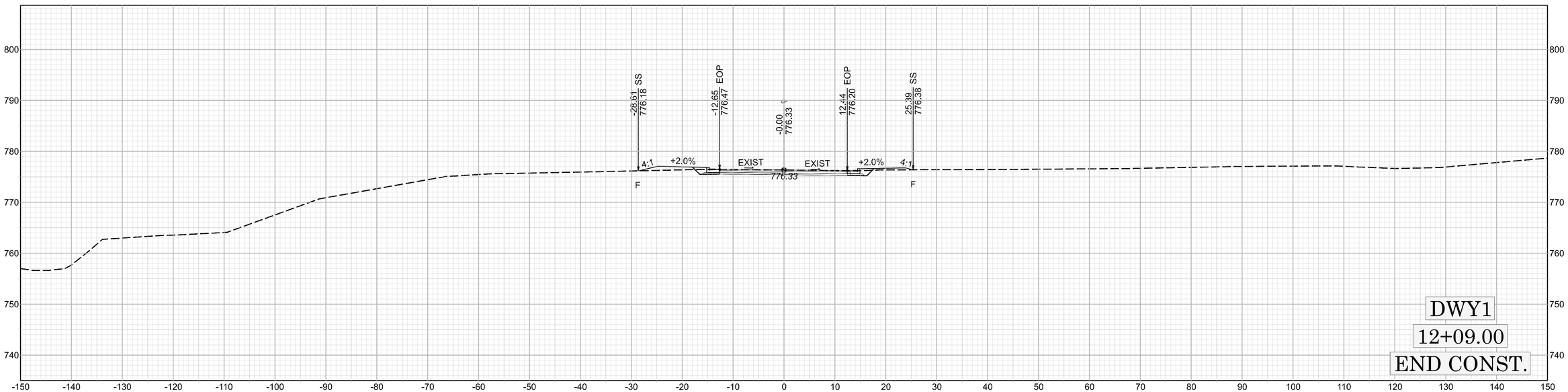
-28.61
776.18
SS
-12.65
776.47
EOP
-0.00
776.33
12.44
776.20
EOP
25.39
776.38
SS
4:1
+2.0%
EXIST
EXIST
+2.0%
4:1
776.33
F
F
DWY1
12+09.00
END CONST.

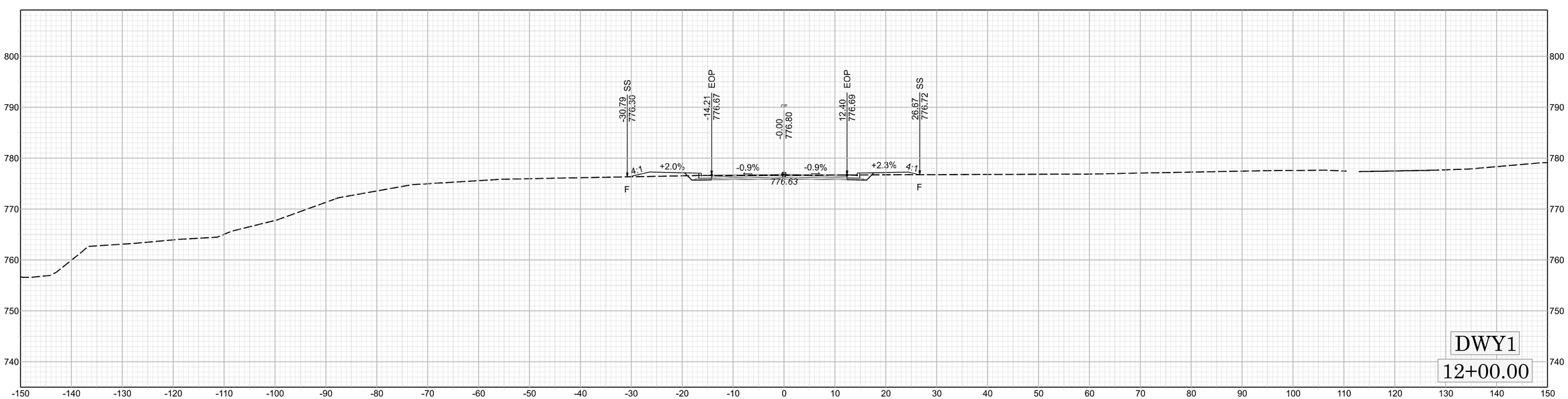
-30.79
776.30
SS
-14.21
776.67
EOP
-0.00
776.80
12.40
776.69
EOP
26.67
776.72
SS
4:1
+2.0%
-0.9%
-0.9%
+2.3%
4:1
776.63
F
F
DWY1
12+00.00

Docusign Envelope ID: 115861F0-3D8B-8D46-83DB-0EA8C2DB61A6

04/23/24

TIP PROJECT: BP9-R002

CONTRACT: D100384

STATE OF NORTH CAROLINA
DIVISION OF HIGHWAYS

FORSYTH COUNTY

STATE	STATE PROJECT REFERENCE NO.	SHEET NO.	TOTAL SHEETS
N.C.	BP9-R002		

STATE PROJ. NO.	F. A. PROJ. NO.	DESCRIPTION
BP9.R002.1		PE
BP9.R002.2		UTILITY & R/W
BP9.R002.3		CONSTRUCTION

LOCATION: *BRIDGE NO. 330261 ON SR 1525 (YADKINVILLE RD) OVER REYNOLDA COMMONS BYPASS*

TYPE OF WORK: *GRADING, PAVING, DRAINAGE, AND STRUCTURE*

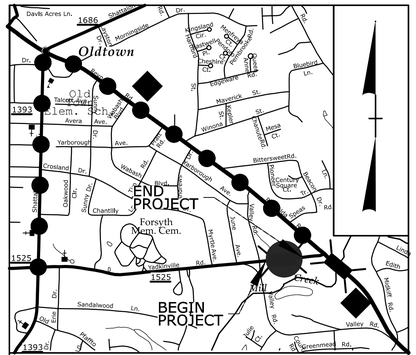

OFFSITE DETOUR ROUTE

VICINITY MAP (NTS)

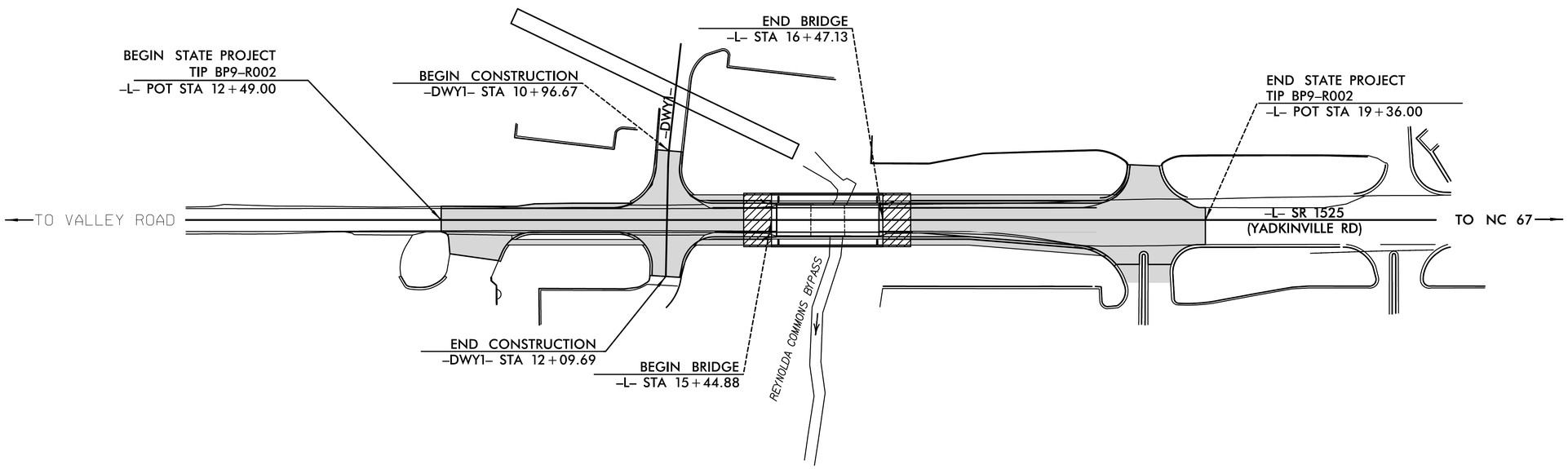

NAD 83
NA 2011

STRUCTURE

DOCUMENT NOT CONSIDERED FINAL UNLESS ALL SIGNATURES COMPLETED

DESIGN DATA

ADT 2026 = 14,175
ADT 2046 = 24,675
K = N/A %
D = N/A %
T = 7 % *
V = 50 MPH
* TTST =3 DUAL =4
FUNC CLASS =
MAJOR COLLECTOR
REGIONAL TIER

PROJECT LENGTH

LENGTH OF ROADWAY TIP PROJECT BP9-R002 = 0.111 MILE
LENGTH OF STRUCTURE TIP PROJECT BP9-R002 = 0.019 MILE
TOTAL LENGTH OF TIP PROJECT BP9-R002 = 0.130 MILE

STV Engineers, Inc.
2151 Hawkins Street, Suite 1400
Charlotte, NC 28203
NC License Number F-0991

2024 STANDARD SPECIFICATIONS

RIGHT OF WAY DATE: MARCH 6, 2025

LETTING DATE: AUGUST 26, 2026

MICHAEL B. KHIN P.E.
PROJECT ENGINEER

FILIP WEIL
PROJECT DESIGN ENGINEER

JEREMY KEATON, P.E. PLS
NCDOT CONTACT

STRUCTURES ENGINEER

NORTH CAROLINA PROFESSIONAL SEAL 057121 ENGINEER AMELIA A. SAM
Signed by:
6/26/2026

SIGNATURE: _____ *P.E.*

STATE OF NORTH CAROLINA DEPARTMENT OF TRANSPORTATION

Docusign Envelope ID: 115861F0-3D8B-8D46-83DB-0EA8C2DB61A6

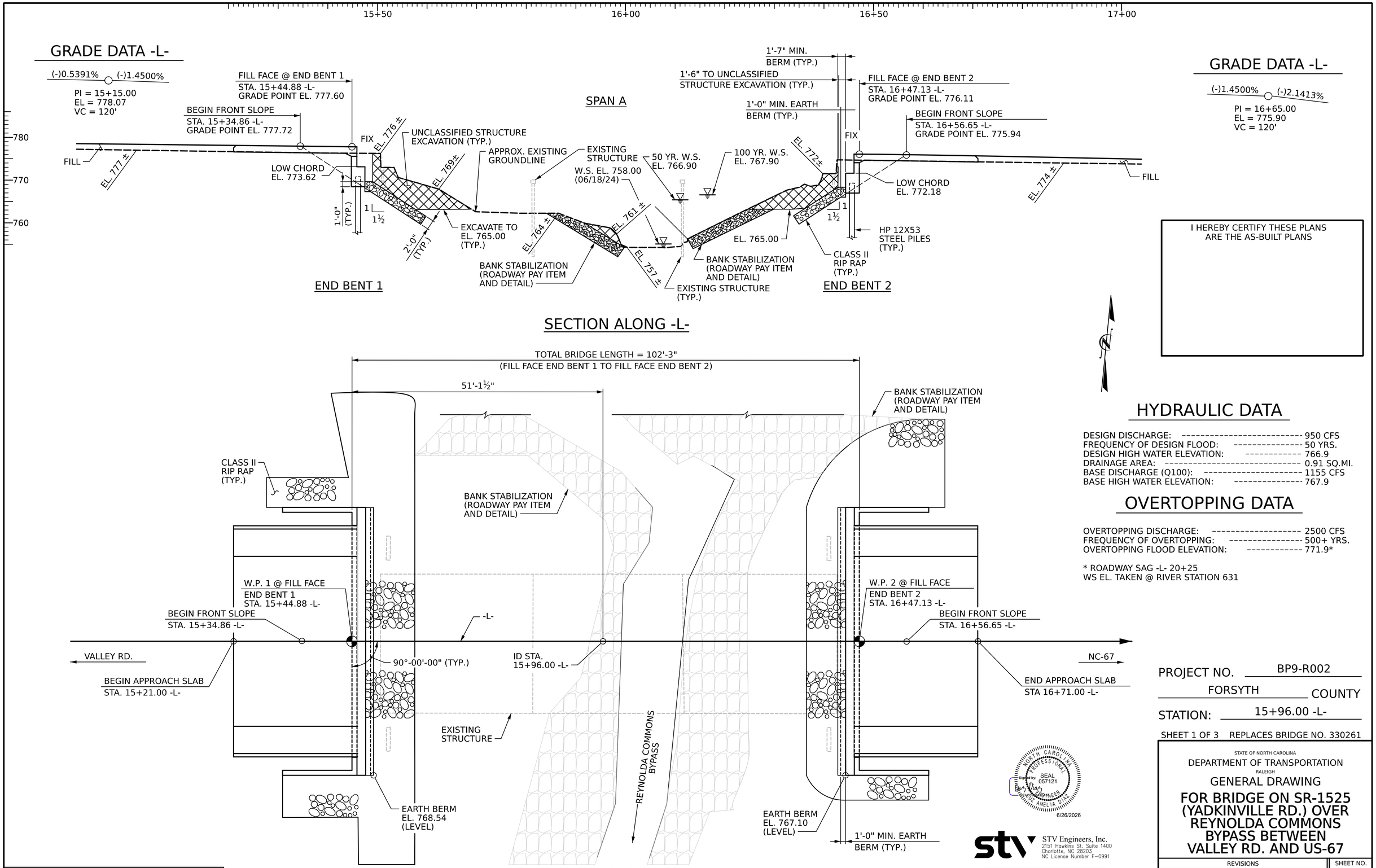

I HEREBY CERTIFY THESE PLANS ARE THE AS-BUILT PLANS

HYDRAULIC DATA

DESIGN DISCHARGE:	950 CFS
FREQUENCY OF DESIGN FLOOD:	50 YRS.
DESIGN HIGH WATER ELEVATION:	766.9
DRAINAGE AREA:	0.91 SQ.MI.
BASE DISCHARGE (Q100):	1155 CFS
BASE HIGH WATER ELEVATION:	767.9

OVERTOPPING DATA

OVERTOPPING DISCHARGE:	2500 CFS
FREQUENCY OF OVERTOPPING:	500+ YRS.
OVERTOPPING FLOOD ELEVATION:	771.9*

* ROADWAY SAG -L- 20+25
WS EL. TAKEN @ RIVER STATION 631

PROJECT NO. BP9-R002
FORSYTH COUNTY
STATION: 15+96.00 -L-

SHEET 1 OF 3 REPLACES BRIDGE NO. 330261

STATE OF NORTH CAROLINA
DEPARTMENT OF TRANSPORTATION
RALEIGH

GENERAL DRAWING

FOR BRIDGE ON SR-1525 (YADKINVILLE RD.) OVER REYNOLDA COMMONS BYPASS BETWEEN VALLEY RD. AND US-67

NORTH CAROLINA PROFESSIONAL SEAL 057121 ENGINEER LAURA AMELIA DIAZ
Digitally signed by:
6/26/2026

STV Engineers, Inc.
2151 Hawkins St. Suite 1400
Charlotte, NC 28203
NC License Number F-0991

DOCUMENT NOT CONSIDERED FINAL UNLESS ALL SIGNATURES COMPLETED

REVISIONS								SHEET NO.
NO	BY:	DATE:	NO	BY:	DATE:			S-1
1			3					TOTAL SHEETS
2			4					21

DRAWN BY :	FMW	DATE :	4-25
CHECKED BY :	LAD	DATE :	8-25
DESIGN ENGINEER OF RECORD :	L. DIAZ	DATE :	11-25

khinm 6/26/2026 10:58:15 AM I:\Projects\4022560\4022560_000\50_Deliverables & Submittals\Structures\02 Ustation\05 RFC\40L_00L_BP9-R002_SMU_GDL_00L_33026L.dgn

Docusign Envelope ID: 115861F0-3D8B-8D46-83DB-0EA8C2DB61A6

BENCHMARK BM-1 RAILROAD SPIKE IN 15" SYCAMORE, -L- STA. 16+21.00 -L-, 92' LT., ELEV. 770.90, N 877606, E 1611491

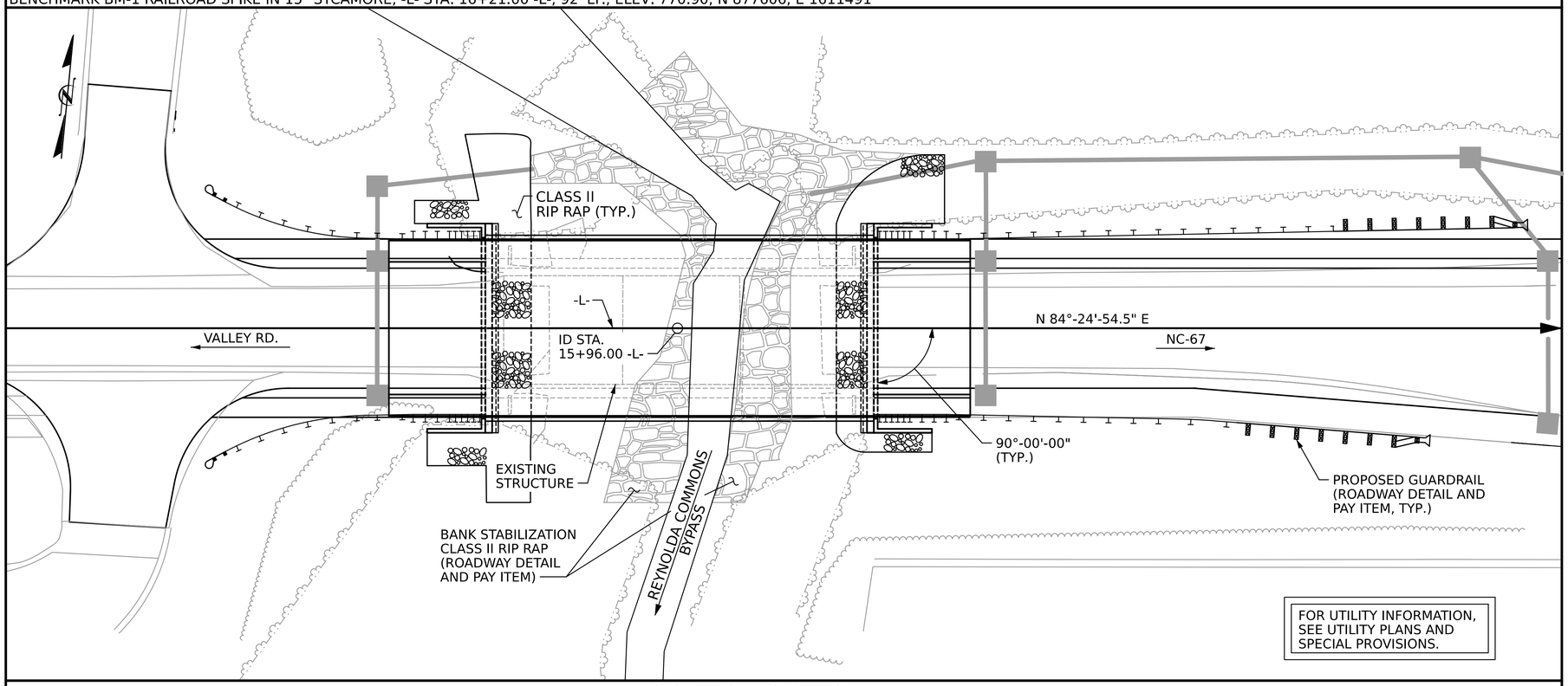

LOCATION SKETCH

GENERAL NOTES

ASSUMED LIVE LOAD = HL-93 OR ALTERNATE LOADING.

THIS BRIDGE HAS BEEN DESIGNED IN ACCORDANCE WITH THE REQUIREMENTS OF THE AASHTO LRFD BRIDGE DESIGN SPECIFICATIONS.

THIS BRIDGE IS LOCATED IN SEISMIC ZONE 1.

FOR OTHER DESIGN DATA AND GENERAL NOTES, SEE SHEET SN.

FOR EROSION CONTROL MEASURES, SEE EROSION CONTROL PLANS.

THE EXISTING STRUCTURE CONSISTING OF A THREE SPAN BRIDGE WITH A 90'-0" TOTAL LENGTH OF REINFORCED CONCRETE DECK ON CONCRETE TEE BEAMS WITH A CLEAR ROADWAY WIDTH 28'-3" AND SUPPORTED BY REINFORCED CONCRETE END BENTS ON STEEL PILES AND REINFORCED CONCRETE BENTS ON CONCRETE ENCASED STEEL PILES AND LOCATED AT THE PROPOSED STRUCTURE SHALL BE REMOVED.

REMOVAL OF THE EXISTING BRIDGE SHALL BE PERFORMED IN A MANNER THAT PREVENTS DEBRIS FROM FALLING INTO THE WATER. THE CONTRACTOR SHALL SUBMIT DEMOLITION PLANS FOR REVIEW AND REMOVE THE BRIDGE IN ACCORDANCE WITH ARTICLE 402-2 OF THE STANDARD SPECIFICATIONS.

THIS STRUCTURE HAS BEEN DESIGNED IN ACCORDANCE WITH "HEC 18 - EVALUATING SCOUR AT BRIDGES".

FOR SUBMITTAL OF WORKING DRAWINGS, SEE SPECIAL PROVISIONS.

FOR FALSEWORK AND FORMWORK, SEE SPECIAL PROVISIONS.

FOR CRANE SAFETY, SEE SPECIAL PROVISIONS.

FOR GROUT FOR STRUCTURES, SEE SPECIAL PROVISIONS.

IN AS MUCH AS THE PAINT SYSTEM ON THE EXISTING STRUCTURAL STEEL CONTAINS LEAD, THE CONTRACTORS ATTENTION IS DIRECTED TO ARTICLE 107-1 OF THE STANDARD SPECIFICATIONS. ANY COSTS FROM COMPLIANCE WITH APPLICABLE STATE OR FEDERAL REGULATIONS PERTAINING TO THE HANDLING OF THE MATERIALS CONTAINING LEAD BASED PAINT SHALL BE INCLUDED IN THE BID PRICE FOR "REMOVAL OF EXISTING STRUCTURE AT STA. 15+96.00 -L-"

THE MATERIAL SHOWN IN THE CROSS HATCHED AREA (ON SHEET 1 OF 2) SHALL BE EXCAVATED FOR A A DISTANCE OF 27 FT. EACH SIDE OF THE CENTERLINE OF ROADWAY AND TO AN ELEVATION OF 765.0 AT BOTH END BENTS AS DIRECTED BY THE ENGINEER. THIS WORK WILL BE PAID FOR AT THE CONTRACT LUMP SUM PRICE FOR UNCLASSIFIED STRUCTURE EXCAVATION. SEE SECTION 412 OF THE STANDARD SPECIFICATIONS.

THE SUBSTRUCTURE OF THE EXISTING BRIDGE INDICATED ON THE PLANS IS FROM THE BEST INFORMATION AVAILABLE. SINCE THIS INFORMATION IS SHOWN FOR THE CONVENIENCE OF THE CONTRACTOR, THE CONTRACTOR SHALL HAVE NO CLAIM WHATSOEVER AGAINST THE DEPARTMENT OF TRANSPORTATION FOR ANY DELAYS OR ADDITIONAL COST INCURRED BASED ON DIFFERENCES BETWEEN THE EXISTING BRIDGE SUBSTRUCTURE SHOWN ON THE PLANS AND THE ACTUAL CONDITIONS AT THE PROJECT SITE.

FOR ASBESTOS ASSESSMENT FOR BRIDGE DEMOLITION, SEE SPECIAL PROVISIONS.

FOR BOX BEAM POST TENSIONING, SEE SPECIAL PROVISIONS.

BILL OF MATERIAL

	REMOVAL OF EXISTING STRUCTURE AT STA. 15+96.00 -L-	ASBESTOS ASSESSMENT	UNCLASSIFIED STRUCTURE EXCAVATION	CONCRETE WEARING SURFACE	GROOVING BRIDGE FLOOR	CLASS AA CONCRETE	CLASS A CONCRETE	BRIDGE APPROACH SLABS	REINFORCING STEEL	EPOXY COATED REINFORCING STEEL	PILE DRIVING EQUIPMENT SETUP FOR HP12X53 STEEL PILES	HP 12X53 STEEL PILES		THREE BAR METAL RAIL	RIP RAP CLASS II (2'-0" THICK)	GEOTEXTILE FOR DRAINAGE	ELASTOMERIC BEARINGS	3'-0" X 3'-3" PRESTRESSED CONCRETE BOX BEAMS	
	LUMP SUM	LUMP SUM	LUMP SUM	SQ. FT.	SQ. FT.	CU. YD.	CU. YD.	LUMP SUM	LBS.	LBS.	EA.	NO.	LIN. FT.	LIN. FT.	TONS	SQ. YDS.	LUMP SUM	NO.	LIN. FT.
SUPERSTRUCTURE				3,425	4,657	32.1				2,131				194.7				16	1600
END BENT 1							37.2		5,668		8	8	240		148	165			
END BENT 2							37.2		5,668		8	8	200		150	166			
TOTAL	LUMP SUM	LUMP SUM	LUMP SUM	3,425	4,657	32.1	74.4	LUMP SUM	11,336	2,131	16	16	440	194.7	298	331	LUMP SUM	16	1600

PROJECT NO. BP9-R002

FORSYTH COUNTY

STATION: 15+96.00 -L-

SHEET 2 OF 3

STATE OF NORTH CAROLINA
DEPARTMENT OF TRANSPORTATION
RALEIGH

GENERAL DRAWING

FOR BRIDGE ON SR-1525 (YADKINVILLE RD.) OVER REYNOLDA COMMONS BYPASS BETWEEN VALLEY RD. AND US-67

NORTH CAROLINA PROFESSIONAL SEAL 057121 ENGINEER AMELIA DIAZ
Signed by:
6/26/2026

STV Engineers, Inc.
2151 Hawkins St. Suite 1400
Charlotte, NC 28203
NC License Number F-0991

DOCUMENT NOT CONSIDERED FINAL UNLESS ALL SIGNATURES COMPLETED

REVISIONS						SHEET NO.
NO	BY:	DATE:	NO	BY:	DATE:	S-2
1			3			TOTAL SHEETS
2			4			21

DRAWN BY : FMW DATE : 4-25
CHECKED BY : LAD DATE : 8-25
DESIGN ENGINEER OF RECORD : L. DIAZ DATE : 11-25

khlnm 6/26/2026 10:58:18 AM I:\Projects\4022560\4022560_000\50_Deliverables & Submittals\Structures\02 Ustation\05 RFC\40L003_BP9-R002_SMU_GD2_33026L.dgn

Docusign Envelope ID: 115861F0-3D8B-8D46-83DB-0EA8C2DB61A6

khlnm 6/26/2026 10:58:20 AM I:\Projects\4022560\4022560_000\50_Deliverables & Submittals\Structures\02 Ustation\05 RFC\401_005_BP9-R002_SMU_GD3_33026i.dgn

SUMMARY OF PILE INFORMATION/INSTALLATION

(Blank entries indicate item is not applicable to structure)

End Bent / Bent No, Pile(s) #(-#) (e.g., "Bent 1, Piles 1-5")	Number of Piles per Line	Factored Resistance per Pile KIPS	Pile Cut-Off (Top of Pile) Elevation FT	Estimated Pile Length per Pile FT	Scour Critical Elevation FT	Driven Piles			Predrilling for Piles **			Drilled-In Piles		
						Minimum Pile Tip (Tip No Higher Than) Elevation FT	Required Driving Resistance (RDR)* per pile KIPS	Pile Redrives Quantity EACH	Predrilling Length per Pile LIN FT	Predrilling Elevation (Elevation Not To Predrill Below) FT	Maximum Predrilling Diameter INCHES	Pile Excavation (Bottom of Hole) Elevation FT	Pile Excavation Not In Soil per Pile LIN FT	Pile Excavation In Soil per Pile LIN FT
End Bent 1, Piles 1-4	4	240	See Substructure Plans	25	-	-	400	-	-	-	-	-	-	-
End Bent 1, Piles 5-8	4	240	See Substructure Plans	35	-	-	400	-	-	-	-	-	-	-
End Bent 2, Piles 1-8	8	240	See Substructure Plans	25	-	-	400	-	-	-	-	-	-	-
TOTAL QUANTITY:														

$$^{*}RDR = \frac{Factored\ Resistance + Factored\ Drag\ Load + Factored\ Dead\ Load}{Dynamic\ Resistance\ Factor} + Nominal\ Drag\ Load\ Resistance + Nominal\ Resistance\ from\ Scourable\ Material$$

** Predrilling for Piles is required for end bents/bents with a predrilling length and at the Contractor's option for end bents/bents with predrilling information but no predrilling length.

PILE DESIGN INFORMATION

(Blank entries indicate item is not applicable to structure)

End Bent / Bent No, Pile(s) #(-#) (e.g., "Bent 1, Piles 1-5")	Factored Axial Load per Pile KIPS	Factored Drag Load per Pile KIPS	Factored Dead Load * per Pile KIPS	Dynamic Resistance Factor	Nominal Drag Resistance per Pile KIPS	Nominal Scour Resistance per Pile KIPS
End Bent 1, Piles 1-8	240	-	-	0.60	-	-
End Bent 2, Piles 1-8	240	-	-	0.60	-	-

* Factored Dead Load is factored weight of pile above the ground line.

NOTES:

1. The Pile Foundation Tables are based on the bridge substructure design and foundation recommendations sealed by a North Carolina Professional Engineer (Mohammed Mulla, #018979) on 04-25-2025.
2. Total Pile Driving Equipment Setup quantity (not shown in Pile Foundation Tables) equals the number of driven piles, i.e., the number of piles with a Required Driving Resistance.
3. The Engineer may adjust the quantity for DPT Testing and Pipe Pile Plates when necessary.
4. For Piles, See Section 450 of the Standard Specifications

NORTH CAROLINA PROFESSIONAL SEAL 057121 ENGINEER LUIS AMELIA DIAZ
Signed by:
6/26/2026

STV Engineers, Inc.
2151 Hawkins St. Suite 1400
Charlotte, NC 28203
NC License Number F-0991

DOCUMENT NOT CONSIDERED FINAL UNLESS ALL SIGNATURES COMPLETED

PROJECT NO. BP9-R002

FORSYTH COUNTY

STATION: 15+96.00 -L-

SHEET 3 OF 3

STATE OF NORTH CAROLINA
DEPARTMENT OF TRANSPORTATION
RALEIGH
GENERAL DRAWING

PILE FOUNDATION TABLES

REVISIONS						SHEET NO.
NO	BY:	DATE:	NO	BY:	DATE:	S-3
1			3			TOTAL SHEETS
2			4			21

DRAWN BY : FMW DATE : 4-25
CHECKED BY : LAD DATE : 8-25
DESIGN ENGINEER OF RECORD : L. DIAZ DATE : 11-25

Docusign Envelope ID: 115861F0-3D8B-8D46-83DB-0EA8C2DB61A6

LOAD AND RESISTANCE FACTOR RATING (LRFR) SUMMARY FOR PRESTRESSED CONCRETE GIRDERS

LOAD TYPE		VEHICLE	WEIGHT (W) (TONS)	CONTROLLING LOAD RATING	MINIMUM RATING FACTORS (RF)	TONS = W X RF	STRENGTH I LIMIT STATE											SERVICE III LIMIT STATE						COMMENT NUMBER
							LIVELOAD FACTORS	MOMENT					SHEAR					LIVELOAD FACTORS	MOMENT					
								DISTRIBUTION FACTORS (DF)	RATING FACTOR	SPAN	GIRDER LOCATION	DISTANCE FROM LEFT END OF SPAN (ft)	DISTRIBUTION FACTORS (DF)	RATING FACTOR	SPAN	GIRDER LOCATION	DISTANCE FROM LEFT END OF SPAN (ft)		DISTRIBUTION FACTORS (DF)	RATING FACTOR	SPAN	GIRDER LOCATION	DISTANCE FROM LEFT END OF SPAN (ft)	
DESIGN LOAD		HL-93 (INVENTORY)	N/A	1	1.31	--	1.75	0.254	1.58	A	I	49.25	0.409	2.37	A	I	9.25	0.80	0.254	1.31	A	I	49.25	
		HL-93 (OPERATING)	N/A		2.05	--	1.35	0.254	2.05	A	I	49.25	0.409	3.14	A	I	9.25	N/A	--	--	--	--	--	
		HS-20 (INVENTORY)	36.000	2	1.82	65.520	1.75	0.254	2.20	A	I	49.25	0.409	3.23	A	I	9.25	0.80	0.254	1.82	A	I	49.25	
		HS-20 (OPERATING)	36.000		2.85	102.600	1.35	0.254	2.85	A	I	49.25	0.409	4.27	A	I	9.25	N/A	--	--	--	--	--	
LEGAL LOAD	SINGLE VEHICLE (SV)	SNSH	13.500		4.31	58.185	1.40	0.254	6.50	A	I	49.25	0.409	10.43	A	I	9.25	0.80	0.254	4.31	A	I	49.25	
		SNGARBS2	20.000		3.12	62.400	1.40	0.254	4.71	A	I	49.25	0.409	7.25	A	I	9.25	0.80	0.254	3.12	A	I	49.25	
		SNAGRIS2	22.000		2.92	64.240	1.40	0.254	4.41	A	I	49.25	0.409	6.67	A	I	9.25	0.80	0.254	2.92	A	I	49.25	
		SNCOTTS3	27.250		2.14	58.315	1.40	0.254	3.23	A	I	49.25	0.409	5.08	A	I	9.25	0.80	0.254	2.14	A	I	49.25	
		SNAGGRS4	34.925		1.76	61.468	1.40	0.254	2.65	A	I	49.25	0.409	4.10	A	I	9.25	0.80	0.254	1.76	A	I	49.25	
		SNS5A	35.550		1.72	61.146	1.40	0.254	2.59	A	I	49.25	0.409	4.12	A	I	9.25	0.80	0.254	1.72	A	I	49.25	
		SNS6A	39.950		1.56	62.322	1.40	0.254	2.36	A	I	49.25	0.409	3.70	A	I	9.25	0.80	0.254	1.56	A	I	49.25	
		SNS7B	42.000		1.49	62.580	1.40	0.254	2.25	A	I	49.25	0.409	3.60	A	I	9.25	0.80	0.254	1.49	A	I	49.25	
	TRUCK TRACTOR SEMI-TRAILER (TTST)	TNAGRIT3	33.000		1.90	62.700	1.40	0.254	2.87	A	I	49.25	0.409	4.48	A	I	9.25	0.80	0.254	1.90	A	I	49.25	
		TNT4A	33.075		1.91	63.173	1.40	0.254	2.88	A	I	49.25	0.409	4.39	A	I	9.25	0.80	0.254	1.91	A	I	49.25	
		TNT6A	41.600		1.55	64.480	1.40	0.254	2.33	A	I	49.25	0.409	3.78	A	I	9.25	0.80	0.254	1.55	A	I	49.25	
		TNT7A	42.000		1.55	65.100	1.40	0.254	2.33	A	I	49.25	0.409	3.71	A	I	9.25	0.80	0.254	1.55	A	I	49.25	
		TNT7B	42.000		1.58	66.360	1.40	0.254	2.39	A	I	49.25	0.409	3.53	A	I	9.25	0.80	0.254	1.58	A	I	49.25	
		TNAGRIT4	43.000		1.52	65.360	1.40	0.254	2.29	A	I	49.25	0.409	3.42	A	I	9.25	0.80	0.254	1.52	A	I	49.25	
		TNAGRT5A	45.000		1.44	64.800	1.40	0.254	2.17	A	I	49.25	0.409	3.36	A	I	9.25	0.80	0.254	1.44	A	I	49.25	
		TNAGRT5B	45.000	3	1.43	64.350	1.40	0.254	2.15	A	I	49.25	0.409	3.25	A	I	9.25	0.80	0.254	1.43	A	I	49.25	
EMERGENCY VEHICLE (EV)		EV2	28.750		2.20	63.250	1.30	0.254	3.57	A	I	49.25	0.409	5.40	A	I	9.25	0.80	0.254	2.20	A	I	49.25	
		EV3	43.000	4	1.45	62.350	1.30	0.254	2.35	A	I	49.25	0.409	3.55	A	I	9.25	0.80	0.254	1.45	A	I	49.25	

LOAD FACTORS:

DESIGN LOAD RATING FACTORS	LIMIT STATE	g_{DC}	g_{DW}
	STRENGTH I	1.25	1.50
	SERVICE III	1.00	1.00

NOTES:

MINIMUM RATING FACTORS ARE BASED ON THE STRENGTH I AND SERVICE III LIMIT STATES.

ALLOWABLE STRESSES FOR SERVICE III LIMIT STATE ARE AS REQUIRED FOR DESIGN.

COMMENTS:

1.
2.
3.
4.

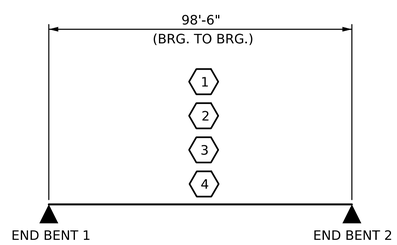

SPAN A

LRFR SUMMARY

CONTROLLING LOAD RATING
1 DESIGN LOAD RATING (HL-93)
2 DESIGN LOAD RATING (HS-20)
3 LEGAL LOAD RATING * *
4 EMERGENCY VEHICLE LOAD RATTING * *
* * SEE CHART FOR VEHICLE TYPE

GIRDER LOCATION
I - INTERIOR GIRDER
EL - EXTERIOR LEFT GIRDER
ER - EXTERIOR RIGHT GIRDER

PROJECT NO. BP9-R002

FORSYTH COUNTY

STATION: 15+96.00 -L-

NORTH CAROLINA PROFESSIONAL SEAL 057121 ENGINEER LAURA AMELIA DIAZ
Signed by:
6/26/2026

STV Engineers, Inc.
2151 Hawkins St. Suite 1400
Charlotte, NC 28203
NC License Number F-0991

DOCUMENT NOT CONSIDERED FINAL UNLESS ALL SIGNATURES COMPLETED

STATE OF NORTH CAROLINA
DEPARTMENT OF TRANSPORTATION
RALEIGH

LRFR SUMMARY FOR 100' BOX BEAM UNIT 90° SKEW

(NON-INTERSTATE TRAFFIC)

REVISIONS								SHEET NO.
NO	BY:	DATE:	NO	BY:	DATE:			S-4
1			3					TOTAL SHEETS
2			4					21

DRAWN BY :	FMW	DATE :	4-25
CHECKED BY :	LAD	DATE :	8-25
DESIGN ENGINEER OF RECORD :	L. DIAZ	DATE :	11-25

khlnm 6/26/2026 10:59:11 AM I:\Projects\4022560\4022560_0001\50_Deliverables & Submittals\Structures\02 Ustation\05 RFC\40L_007_BP9-R002_SMU_LRFR_004_330261.dgn

Docusign Envelope ID: 115861F0-3D8B-8D46-83DB-0EA8C2DB61A6

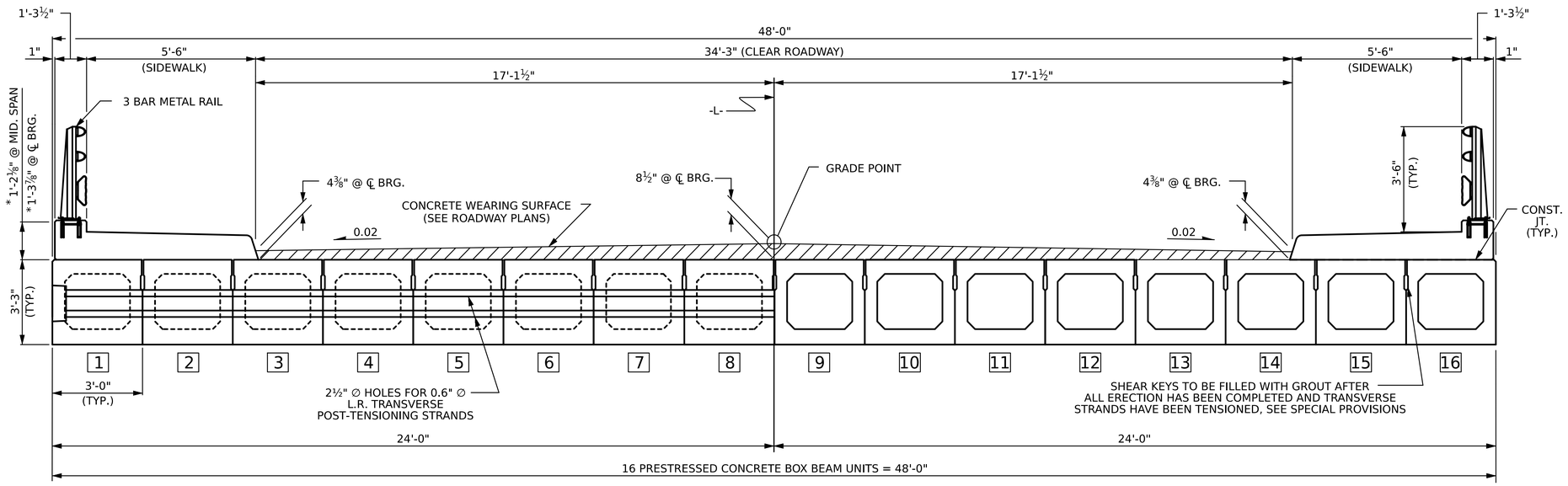

HALF SECTION
AT INTERMEDIATE DIAPHRAGMS

HALF SECTION
THROUGH VOIDS

TYPICAL SECTION

* THE HEIGHT OF THE RAIL PEDESTAL AND CONCRETE THICKNESS VARIES, WHILE THE TOP OF THE RAIL PEDESTAL WILL FOLLOW THE PROFILE OF THE GUTTERLINE

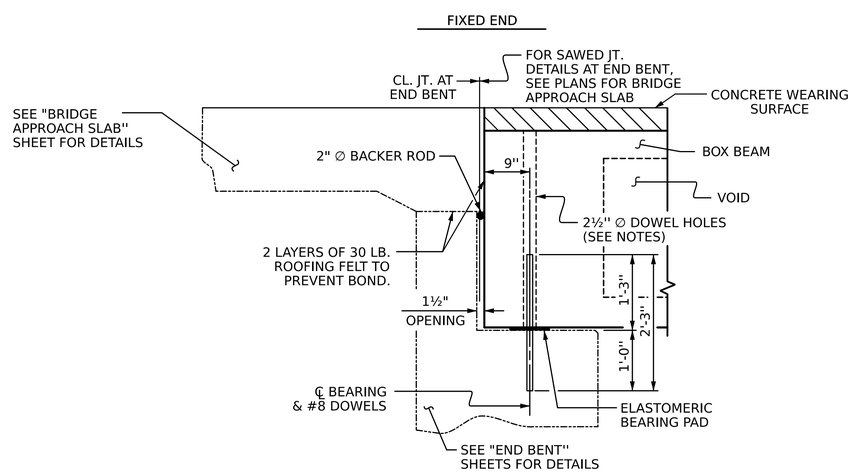

SECTION AT END BENT

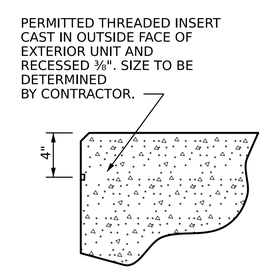

THREADED INSERT DETAIL

NOTES

ALL PRESTRESSING STRANDS SHALL BE 7-WIRE LOW RELAXATION GRADE 270 STRANDS AND SHALL CONFORM TO AASHTO M203 EXCEPT FOR SAMPLING REQUIREMENTS WHICH SHALL BE IN ACCORDANCE WITH THE STANDARD SPECIFICATIONS.

ALL REINFORCING STEEL CAST WITH THE BOX BEAM SECTIONS SHALL BE GRADE 60 AND SHALL BE INCLUDED IN THE UNIT PRICE BID FOR PRESTRESSED CONCRETE BOX BEAMS.

FLAME CUTTING OF THE TRANSVERSE POST-TENSIONING STRAND IS NOT ALLOWED.

RECESSES FOR TRANSVERSE STRANDS SHALL BE GROUTED AFTER THE TENSIONING OF THE STRANDS.

THE 2½" ∅ DOWEL HOLES AT FIXED ENDS OF BOX BEAM SECTIONS SHALL BE FILLED WITH NON-SHRINK GROUT.

THE BACKER RODS SHALL CONFORM TO THE REQUIREMENTS OF TYPE M BOND BREAKER. SEE SECTION 1028 OF THE STANDARD SPECIFICATIONS.

THE TRANSFER OF LOAD FROM THE ANCHORAGES TO THE BOX BEAM UNIT SHALL BE DONE WHEN THE CONCRETE HAS REACHED A COMPRESSIVE STRENGTH OF NOT LESS THAN 6,000 PSI.

ALL REINFORCING STEEL IN THE SIDEWALK SHALL BE EPOXY COATED.

PRESTRESSING STRANDS SHALL BE CUT FLUSH WITH THE BOX BEAM UNIT ENDS.

APPLY EPOXY PROTECTIVE COATING TO BOX BEAM UNIT ENDS.

GROOVED CONTRACTION JOINTS, ½" IN DEPTH, SHALL BE TOOLED IN ALL EXPOSED FACES OF THE SIDEWALK IN ACCORDANCE WITH ARTICLE 825-10(B) OF THE STANDARD SPECIFICATIONS. THE CONTRACTION JOINTS SHALL BE LOCATED AT A SPACING OF 8 FEET TO 10 FEET BETWEEN EXPANSION JOINTS. NO CONTRACTION JOINTS WILL BE REQUIRED FOR SEGMENTS LESS THAN 10 FEET IN LENGTH.

THE LOCATION OF THE VOID DRAINS MAY BE SHIFTED SLIGHTLY WHERE NECESSARY TO CLEAR PRESTRESSING STRANDS OR TRANSVERSE REINFORCING STEEL.

FOR GROUT FOR STRUCTURES, SEE SPECIAL PROVISIONS.

THE PERMITTED THREADED INSERTS ARE DETAILED AS AN OPTION FOR THE CONTRACTOR TO ATTACH FALSEWORK AND FORMWORK DURING CONSTRUCTION.

THE PERMITTED THREADED INSERTS IN THE EXTERIOR UNITS SHALL BE SIZED BY THE CONTRACTOR, SPACED AT 4'-0" CENTERS AND GALVANIZED IN ACCORDANCE WITH SECTION 1076 OF THE STANDARD SPECIFICATIONS. STAINLESS STEEL THREADED INSERTS MAY BE USED AS AN ALTERNATE.

THE PERMITTED THREADED INSERTS SHALL BE GROUTED BY THE CONTRACTOR IMMEDIATELY FOLLOWING REMOVAL OF THE FALSEWORK.

THE COST OF THE PERMITTED THREADED INSERTS SHALL BE INCLUDED IN THE PRICE BID FOR THE PRECAST UNITS.

PAYMENT FOR SIDEWALK SHALL BE INCLUDED IN THE PAY ITEMS FOR "CLASS AA CONCRETE" AND "EPOXY COATED REINFORCING STEEL".

PROJECT NO. BP9-R002

FORSYTH COUNTY

STATION: 15+96.00 -L-

SHEET 1 OF 5

STATE OF NORTH CAROLINA
DEPARTMENT OF TRANSPORTATION
RALEIGH

SUPERSTRUCTURE

3'-0" X 3'-3" PRESTRESSED CONCRETE BOX BEAM UNIT

NORTH CAROLINA PROFESSIONAL SEAL 057121 ENGINEER LUIS AMELIA DIAZ
Signed by:
6/26/2026

STV Engineers, Inc.
2151 Hawkins St. Suite 1400
Charlotte, NC 28203
NC License Number F-0991

DOCUMENT NOT CONSIDERED FINAL UNLESS ALL SIGNATURES COMPLETED

REVISIONS						SHEET NO.
NO	BY:	DATE:	NO	BY:	DATE:	S-5
1			3			TOTAL SHEETS
2			4			21

DRAWN BY :	FMW	DATE :	4-25
CHECKED BY :	LAD	DATE :	7-25
DESIGN ENGINEER OF RECORD :	L. DIAZ	DATE :	11-25

khlnm 6/26/2026 10:59:12 AM I:\Projects\4022560\4022560_000\50_Deliverables & Submittals\Structures\02 Ustation\05 RFC\40L_009_BP9-R002_SMU_BBL_005_330261.dgn

Docusign Envelope ID: 115861F0-3D8B-8D46-83DB-0EA8C2DB61A6

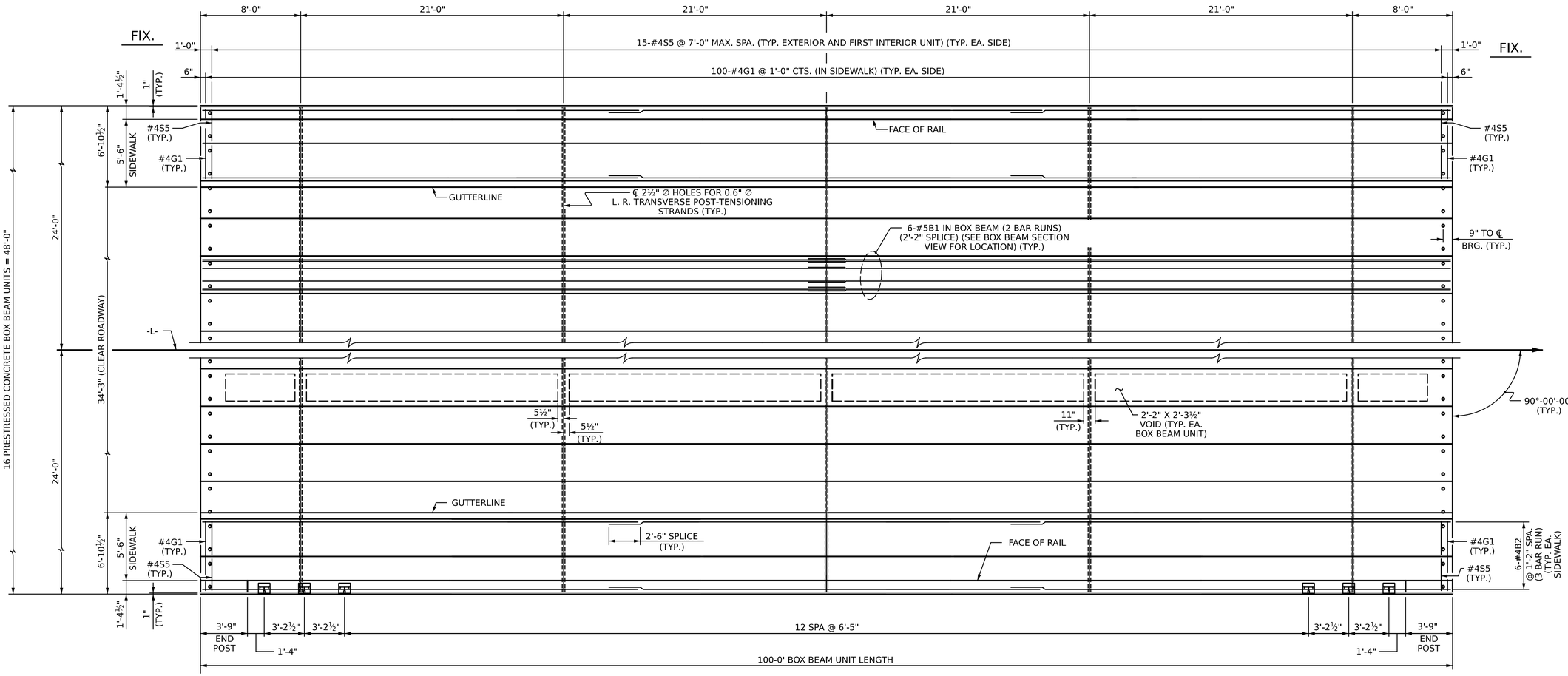

PLAN OF UNIT

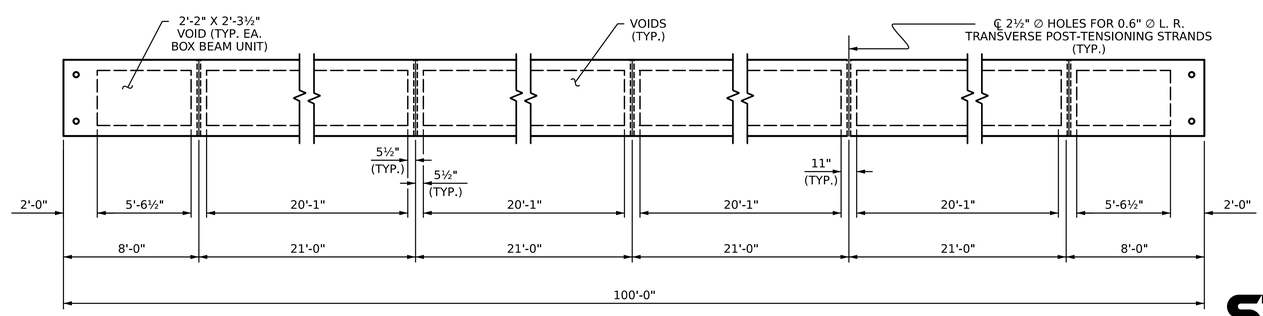

DIAPHRAGM AND VOID LAYOUT

PROJECT NO. BP9-R002

FORSYTH COUNTY

STATION: 15+96.00 -L-

SHEET 2 OF 5

STATE OF NORTH CAROLINA
DEPARTMENT OF TRANSPORTATION
RALEIGH

PLAN OF 100' UNIT
34'-3" CLEAR ROADWAY
90° SKEW

NORTH CAROLINA PROFESSIONAL SEAL 057121 ENGINEER DIAZ, AMELIA LINN
Digitally signed by:
6/26/2026

STV Engineers, Inc.
2151 Hawkins St. Suite 1400
Charlotte, NC 28203
NC License Number F-0991

DOCUMENT NOT CONSIDERED FINAL UNLESS ALL SIGNATURES COMPLETED

REVISIONS						SHEET NO.
NO	BY:	DATE:	NO	BY:	DATE:	S-6
1			3			TOTAL SHEETS
2			4			21

DRAWN BY :	FMW	DATE :	4-25
CHECKED BY :	LAD	DATE :	7-25
DESIGN ENGINEER OF RECORD :	L. DIAZ	DATE :	11-25

khlnm 6/26/2026 10:59:14 AM I:\Projects\4022560\4022560_000\50_Deliverables & Submittals\Structures\02 Ustation\05 RFC\40L_01L_BP9-R002_SMU_BB2_006_330261.dgn

Docusign Envelope ID: 115861F0-3D8B-8D46-83DB-0EA8C2DB61A6

khinm 6/26/2026 10:59:15 AM I:\Projects\4022560\4022560_000\50_Deliverables & Submittals\Structures\02 Ustation\05 RFC\40L013_BP9-R002_SMU_BB3_007_330261.dgn

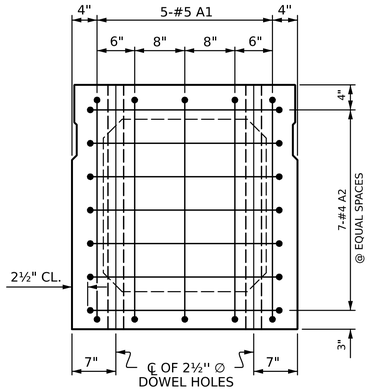

END ELEVATION

SHOWING PLACEMENT OF #5 & #4 "A" BARS AND LOCATION OF DOWEL HOLES. (INTERIOR BOX BEAM SECTION SHOWN-EXTERIOR SECTION SIMILAR EXCEPT SHEAR KEY LOCATION. STRAND LAYOUT NOT SHOWN.)

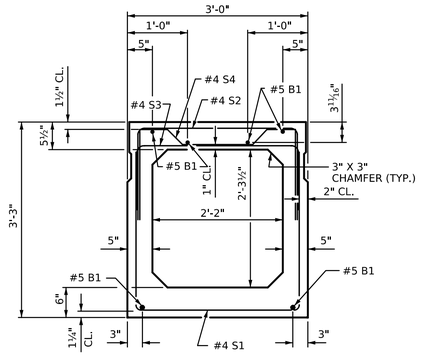

INTERIOR BOX BEAM SECTION 3-14

(STRAND LAYOUT NOT SHOWN)

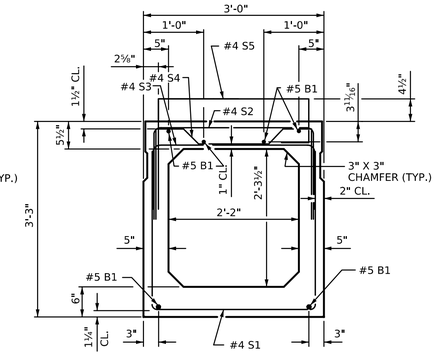

INTERIOR BOX BEAM 2 & 15 SECTION

(STRAND LAYOUT NOT SHOWN)

0.6" ∅ LOW RELAXATION STRAND LAYOUT

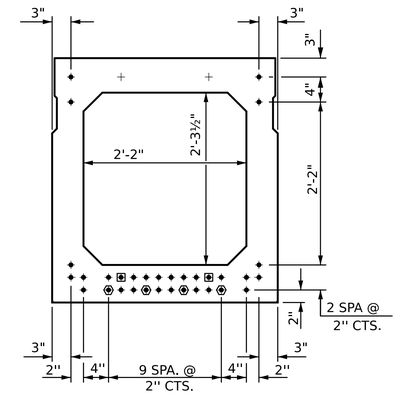

TYPICAL STRAND LOCATION

(32 STRANDS REQUIRED)

DEBONDING LEGEND

- ● FULLY BONDED STRANDS
- ◘ STRANDS DEBONDED FOR 4'-0" FROM END OF GIRDER
- ⬢ STRANDS DEBONDED FOR 12'-0" FROM END OF GIRDER

BOND SHALL BE BROKEN ON STRANDS AS SHOWN FOR THE SPECIFIED LENGTH FROM EACH END OF THE BOX BEAM. SEE STANDARD SPECIFICATIONS ARTICLE 1078-7.

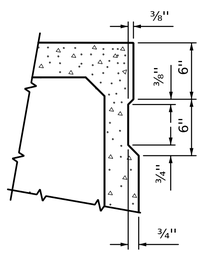

SHEAR KEY DETAIL

NOTE: OMIT SHEAR KEY ON OUTSIDE FACE OF EXTERIOR BOX BEAMS.

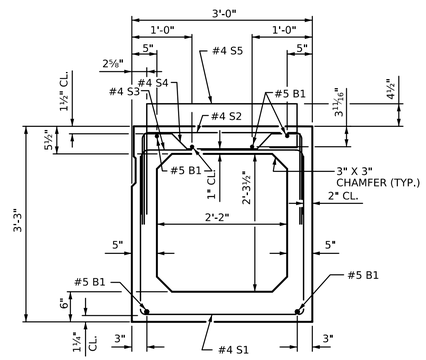

EXTERIOR BOX BEAM 1 & 16 SECTION

(STRAND LAYOUT NOT SHOWN)

GRADE 270 STRANDS	
	0.6" ∅ L.R.
AREA (SQUARE INCHES)	0.217
ULTIMATE STRENGTH (LBS. PER STRAND)	58,600
APPLIED PRESTRESS (LBS. PER STRAND)	43,950

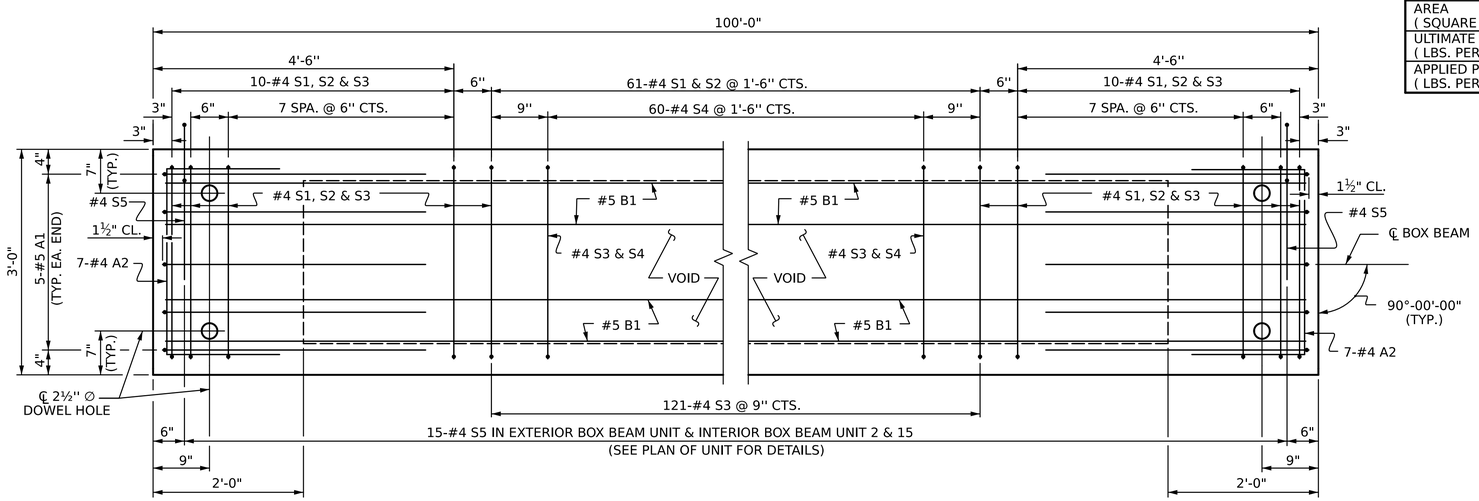

PLAN OF BOX BEAM

EXTERIOR UNIT SHOWN, INTERIOR UNIT 3-14 SIMILAR EXCEPT OMIT #4 S5 BARS.
FOR LOCATION OF DIAPHRAGMS, SEE "PLAN OF UNIT".
FOR THREADED INSERTS, SEE "THREADED INSERT DETAIL".
FOR REINFORCING STEEL IN DIAPHRAGMS, SEE "DOUBLE DIAPHRAGM DETAILS".

BAR TYPES

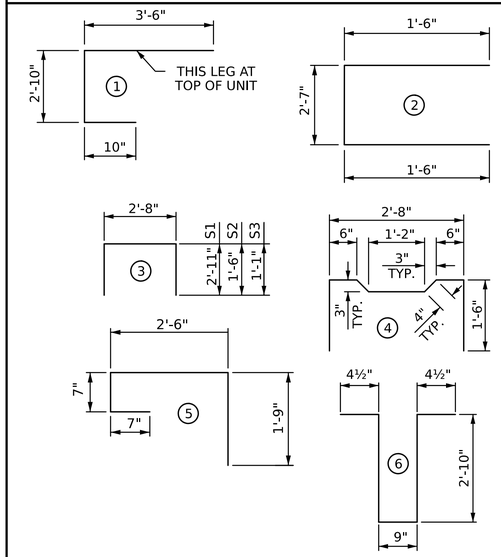

ALL BAR DIMENSIONS ARE OUT TO OUT

BILL OF MATERIAL FOR ONE BOX BEAM SECTION

				EXTERIOR UNIT & INTERIOR UNIT 2 & 15		INTERIOR UNIT	
BAR	NUMBER	SIZE	TYPE	LENGTH	WEIGHT	LENGTH	WEIGHT
A1	10	#5	1	7'-2"	75	7'-2"	75
A2	44	#4	2	5'-7"	164	5'-7"	164
B1	12	#5	STR	50'-11"	637	50'-11"	637
K1	15	#4	6	7'-2"	72	7'-2"	72
K2	10	#4	STR	2'-7"	17	2'-7"	17
S1	81	#4	3	8'-6"	460	8'-6"	460
S2	81	#4	3	5'-8"	307	5'-8"	307
S3	141	#4	3	4'-10"	455	4'-10"	455
S4	60	#4	4	5'-10"	234	5'-10"	234
* S5	15	#4	5	5'-5"	54	--	--
REINFORCING STEEL				2,421	LBS.	2,421	LBS.
* EPOXY COATED REINF. STEEL				54	LBS.	--	LBS.
8000 P.S.I. CONCRETE				19.6	CU. YDS.	19.4	CU. YDS.
0.6" ∅ L.R. STRANDS				No. 32		No. 32	

PROJECT NO. BP9-R002

FORSYTH COUNTY

STATION: 15+96.00 -L-

SHEET 3 OF 5

STATE OF NORTH CAROLINA
DEPARTMENT OF TRANSPORTATION
RALEIGH

3'-0" X 3'-3" PRESTRESSED CONCRETE BOX BEAM UNIT

NORTH CAROLINA PROFESSIONAL SEAL 057121 ENGINEER LAURA AMELIA DIAZ
Digitally signed by:
6/26/2026

STV Engineers, Inc.
2151 Hawkins St. Suite 1400
Charlotte, NC 28203
NC License Number F-0991

DOCUMENT NOT CONSIDERED FINAL UNLESS ALL SIGNATURES COMPLETED

REVISIONS						SHEET NO.
NO	BY:	DATE:	NO	BY:	DATE:	S-7
1			3			TOTAL SHEETS
2			4			21

DRAWN BY : FMW DATE : 4-25
CHECKED BY : LAD DATE : 7-25
DESIGN ENGINEER OF RECORD : L. DIAZ DATE : 11-25

Docusign Envelope ID: 115861F0-3D8B-8D46-83DB-0EA8C2DB61A6

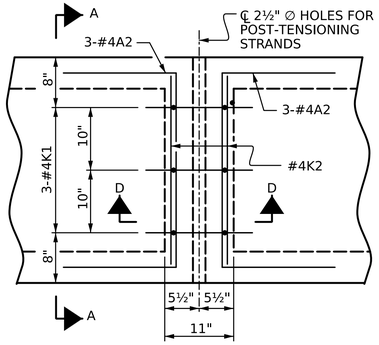

PLAN

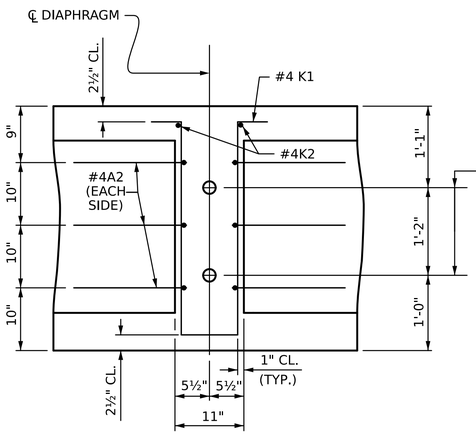

SECTION D-D

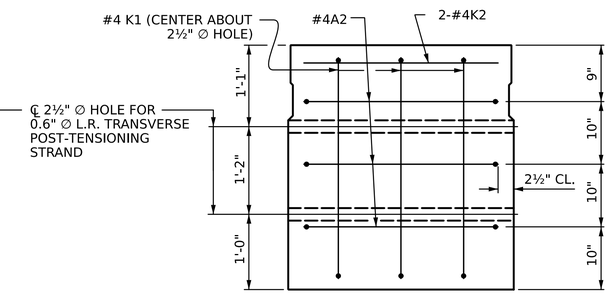

SECTION A-A

VOIDS NOT SHOWN

DOUBLE DIAPHRAGM DETAILS

#4 "S" BARS NOT SHOWN. #4 "S" BARS MAY BE SHIFTED SLIGHTLY TO CLEAR 2½" ∅ HOLE.

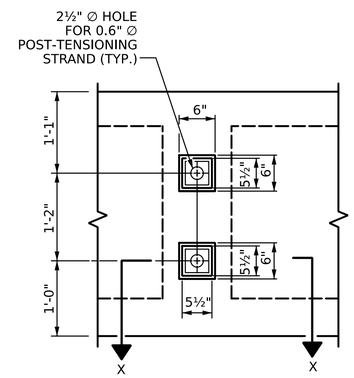

VIEW Y-Y

SHOWING ELEVATION VIEW OF GROUTED RECESS

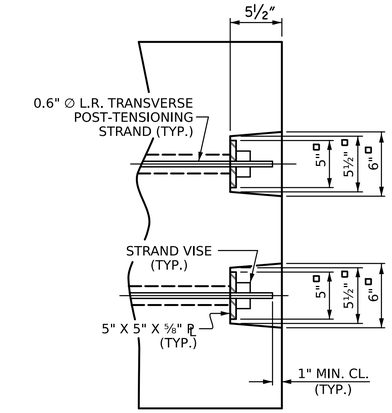

DETAIL "C"

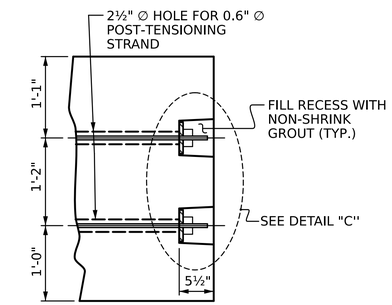

PART SECTION AT RECESS

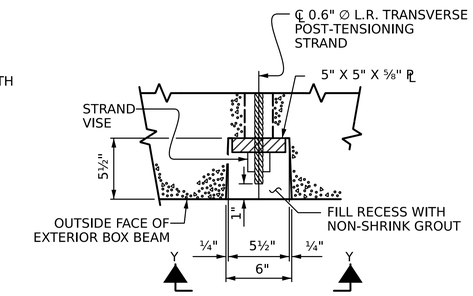

SECTION X-X

SHOWING PLAN VIEW OF GROUTED RECESS

GROUTED RECESS DETAIL AT END OF POST-TENSIONED STRANDS OF EXTERIOR BOX BEAM

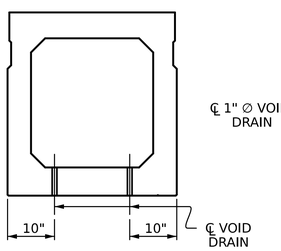

SECTION B-B

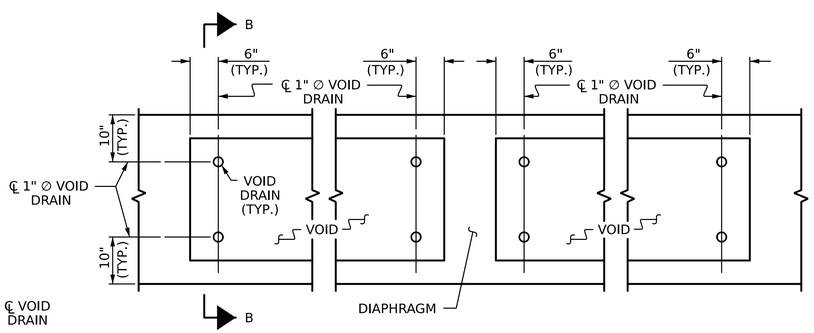

PART PLAN

VOID DRAIN DETAILS

(DIMENSIONS SHOWN ARE TYPICAL FOR EACH VOID)

DEAD LOAD DEFLECTION AND CAMBER	
	3'-0" X 3'-3"
100' BOX BEAM UNIT (NC & SE)	0.6" ∅ L.R. STRAND
CAMBER (SLAB ALONE IN PLACE)	2" ↑
DEFLECTION DUE TO SUPERIMPOSED DEAD LOAD **	⅞" ↓
FINAL CAMBER	1⅛" ↑

** INCLUDES FUTURE WEARING SURFACE

PROJECT NO. BP9-R002

FORSYTH COUNTY

STATION: 15+96.00 -L-

SHEET 4 OF 5

STATE OF NORTH CAROLINA
DEPARTMENT OF TRANSPORTATION
RALEIGH

3'-0" X 3'-3" PRESTRESSED CONCRETE BOX BEAM UNIT

NORTH CAROLINA PROFESSIONAL SEAL 057121 ENGINEER LUIS AMELIA DIAZ
Signed by:
6/26/2026

STV Engineers, Inc.
2151 Hawkins St. Suite 1400
Charlotte, NC 28203
NC License Number F-0991

DOCUMENT NOT CONSIDERED FINAL UNLESS ALL SIGNATURES COMPLETED

REVISIONS						SHEET NO.
NO	BY:	DATE:	NO	BY:	DATE:	S-8
1			3			TOTAL SHEETS
2			4			21

DRAWN BY :	FMW	DATE :	4-25
CHECKED BY :	LAD	DATE :	7-25
DESIGN ENGINEER OF RECORD :	L. DIAZ	DATE :	11-25

khinm 6/26/2026 10:59:16 AM I:\Projects\4022560\4022560_000\50_Deliverables & Submittals\Structures\02 Ustation\05 RFC\40L015_BP9-R002_SMU_BB4_008_330261.dgn

STD. NO. PCBB7

Docusign Envelope ID: 115861F0-3D8B-8D46-83DB-0EA8C2DB61A6

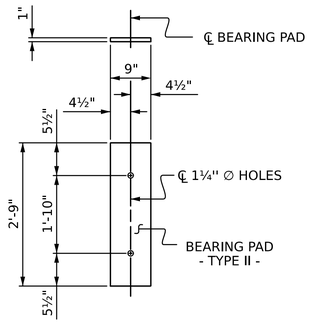

FIXED END

(TYPE II - 32 REQ' D)

ELASTOMERIC BEARING DETAILS

ELASTOMER IN ALL BEARINGS SHALL BE 60 DUROMETER HARDNESS.

GUTTERLINE CONCRETE THICKNESS & SIDEWALK HEIGHT

100' UNITS	CONCRETE OVERLAY THICKNESS		SIDEWALK HEIGHT	
	@ ℄ BRG.	@ MID-SPAN	@ ℄ BRG.	@ MID-SPAN
LEFT & RIGHT	4⅜"	3⅝"	1'-3⅞"	1'-2⅛"

BOX BEAM UNITS REQUIRED

	NUMBER	LENGTH	TOTAL LENGTH
EXTERIOR B.B.	2	100'-0"	200'-0"
INTERIOR B.B.	14	100'-0"	1400'-0"
TOTAL	16	———	1600'-0"

BILL FOR SIDEWALKS AND 4 END POSTS

BAR	NO.	SIZE	TYPE	LENGTH	WEIGHT
* B2	36	#4	STR	34'-11"	840
* E1	8	#7	1	3'-5"	56
* E2	8	#7	1	4'-0"	65
* E3	8	#7	1	4'-7"	75
* E4	8	#7	1	5'-0"	82
* F1	8	#6	STR	1'-10"	22
* F2	8	#6	STR	2'-6"	30
* F3	16	#6	STR	3'-5"	82
* F4	8	#6	STR	3'-8"	44
* G1	200	#4	STR	6'-3"	835
EPOXY COATED REINFORCING STEEL				LBS.	2,131
CLASS AA CONCRETE				CU. YARDS	32.1

BAR TYPE

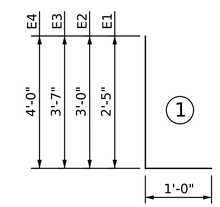

ALL BAR DIMENSIONS ARE OUT TO OUT.

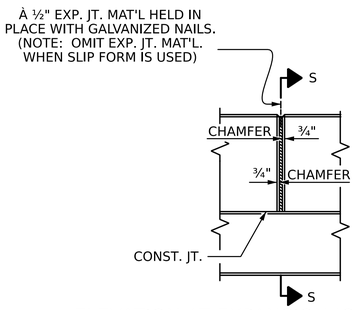

ELEVATION AT EXPANSION JOINTS

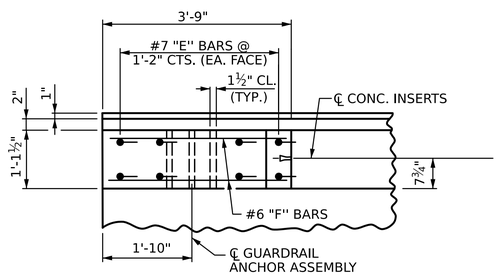

PLAN OF END POST

END BENT 1 LEFT SIDE SHOWN
(END BENT 2 SIMILAR)

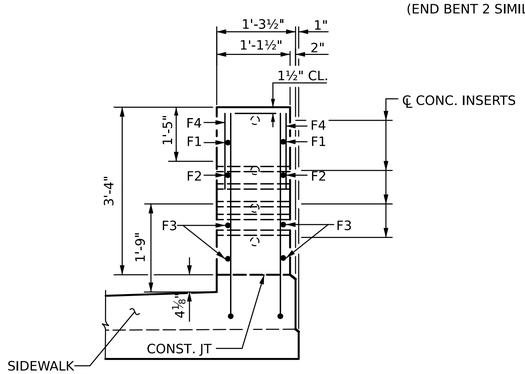

END VIEW

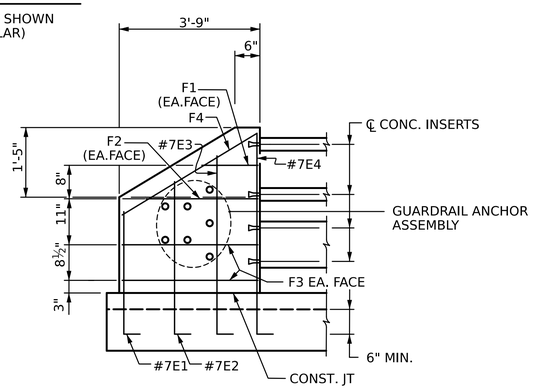

ELEVATION

END POST FOR THREE BAR RAIL

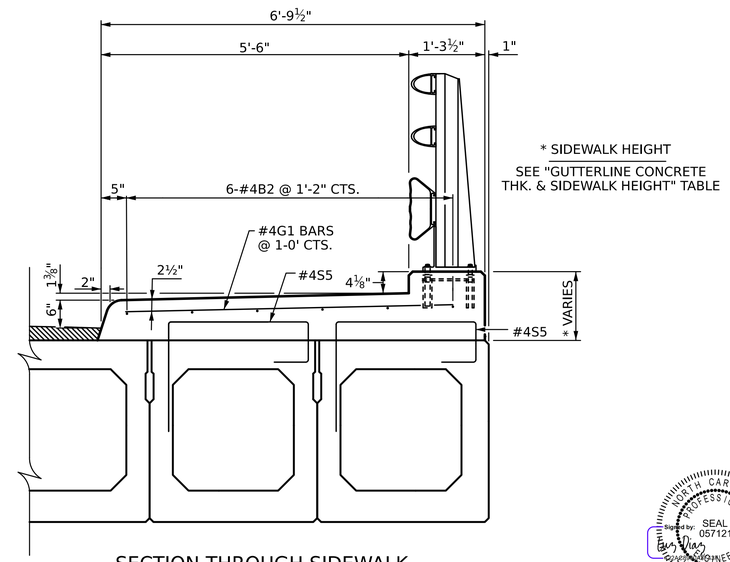

SECTION THROUGH SIDEWALK

PROJECT NO. BP9-R002

FORSYTH COUNTY

STATION: 15+96.00 -L-

SHEET 5 OF 5

STATE OF NORTH CAROLINA
DEPARTMENT OF TRANSPORTATION
RALEIGH

3'-0" X 3'-3" PRESTRESSED CONCRETE BOX BEAM UNIT

NORTH CAROLINA PROFESSIONAL SEAL 057121 ENGINEER LUIS AMELIA DIAZ

Digitally signed by LUIS AMELIA DIAZ
6/26/2026

STV Engineers, Inc.
2151 Hawkins St. Suite 1400
Charlotte, NC 28203
NC License Number F-0991

DOCUMENT NOT CONSIDERED FINAL UNLESS ALL SIGNATURES COMPLETED

REVISIONS						SHEET NO.
NO.	BY:	DATE:	NO.	BY:	DATE:	S-9
1			3			TOTAL SHEETS
2			4			21

DRAWN BY : FMW DATE : 4-25
CHECKED BY : LAD DATE : 7-25
DESIGN ENGINEER OF RECORD : L. DIAZ DATE : 11-25

khinm 6/26/2026 10:59:16 AM I:\Projects\4022560\4022560_000\50_Deliverables & Submittals\Structures\02 Ustation\05 RFC\40L017_BP9-R002_SMU_BB5_009_330261.dgn

Docusign Envelope ID: 115861F0-3D8B-8D46-83DB-0EA8C2DB61A6

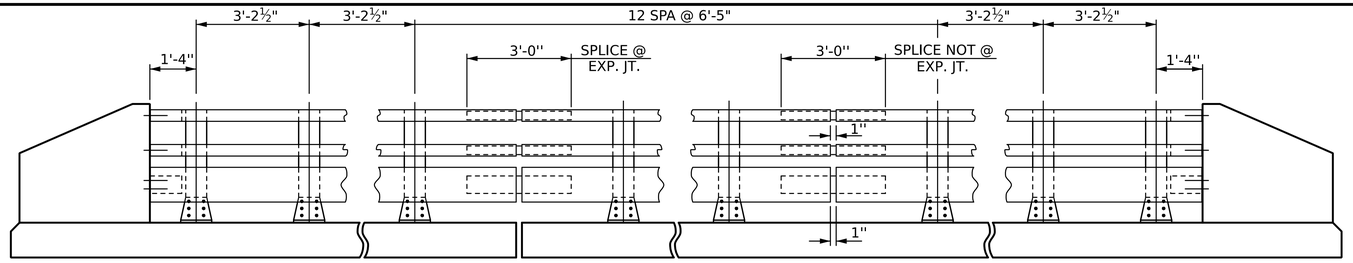

NOTE:
FOR ATTACHMENT OF METAL RAIL TO END POST, SEE SHEET 3 OF 3

ELEVATION

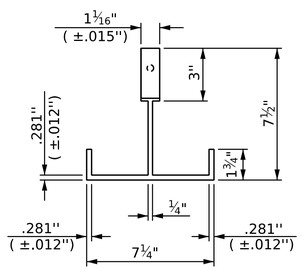

PLAN

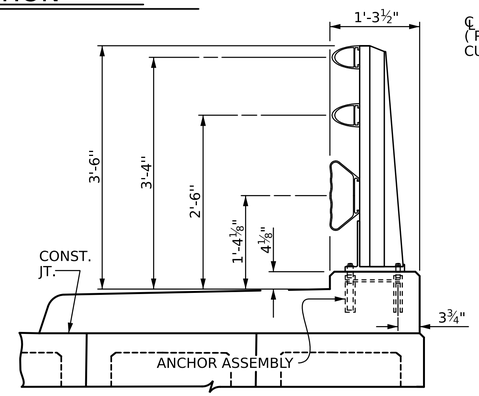

SECTION THRU RAIL

FOR ANCHOR ASSEMBLY, SEE "3 BAR METAL RAIL" SHEET 2 OF 3

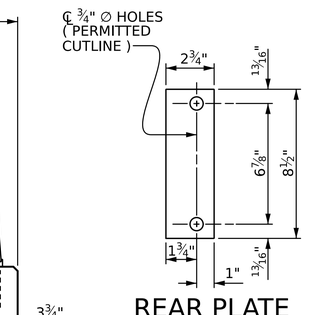

REAR PLATE

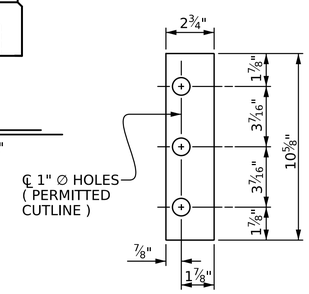

FRONT PLATE

SHIM DETAILS

NOTE :
SHIMS MAY BE CUT ALONG PERMITTED CUTLINE OR SLOTTED TO EDGE OF PLATE TO FACILITATE PLACEMENT.

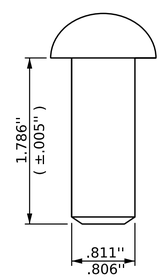

RIVET DETAIL

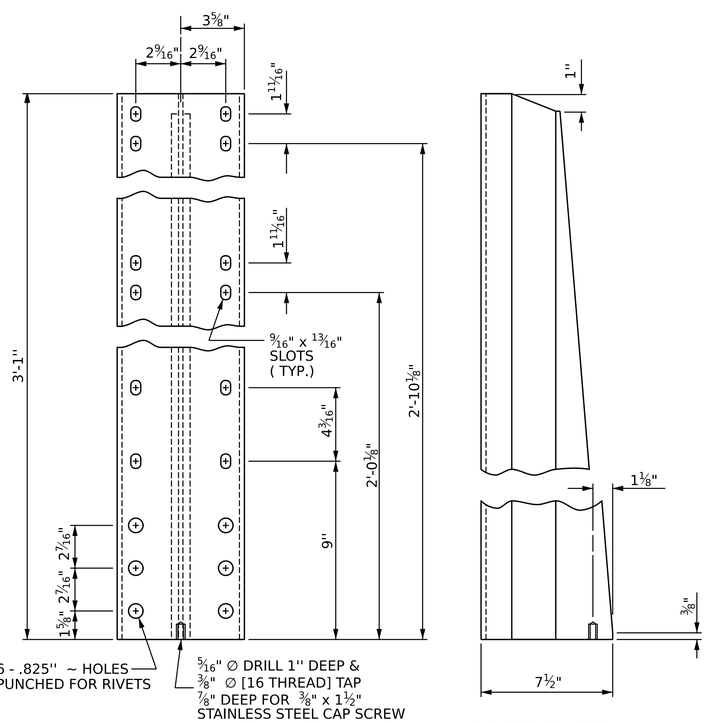

FRONT ELEVATION

SIDE ELEVATION

DETAILS OF POST

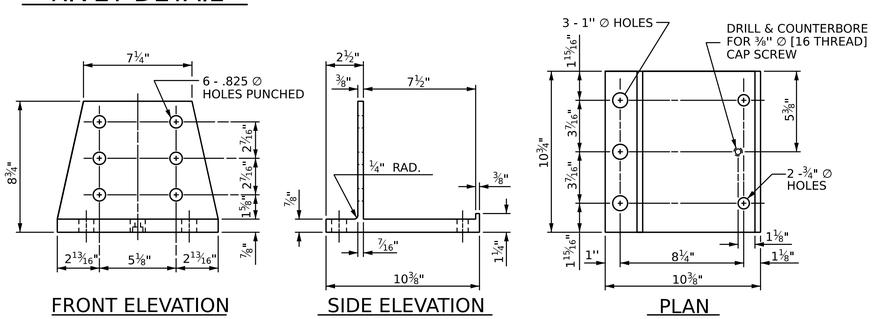

FRONT ELEVATION

SIDE ELEVATION

PLAN

POST BASE DETAILS

NOTES

AT THE CONTRACTOR'S OPTION, METAL RAIL MAY BE EITHER ALUMINUM OR GALVANIZED STEEL IN ACCORDANCE WITH THE REQUIREMENTS OF THE GENERAL NOTES AND THE FOLLOWING SPECIFICATIONS FOR THE ALTERNATE MATERIALS; HOWEVER, THE CONTRACTOR WILL BE REQUIRED TO USE THE SAME RAIL MATERIAL ON ALL STRUCTURES ON THE PROJECT FOR WHICH METAL RAIL IS DESIGNATED.

ALUMINUM RAILS

MATERIAL FOR POSTS, BASES AND RAILS, EXPANSION BARS AND CLAMP BARS SHALL BE ASTM B221 ALLOY 6061-T6.

MATERIAL FOR RIVETS SHALL BE ASTM B316 ALLOY 6061-T6. RIVETS SHALL BE STANDARD BUTTON HEAD AND CONE POINT COLD DRIVEN AS PER DRAWING.

THE BASE OF RAIL POSTS, OR ANY OTHER ALUMINUM SURFACE IN CONTACT WITH CONCRETE SHALL BE THOROUGHLY COATED WITH AN ALUMINUM IMPREGNATED CAULKING COMPOUND OF APPROVED QUALITY.

MATERIAL FOR SHIMS TO BE ASTM B209 ALLOY 6061-T6.

GALVANIZED STEEL RAILS

MATERIALS AND GALVANIZING ARE TO CONFORM TO THE FOLLOWING SPECIFICATIONS:

POST, POST BASES, RAILS, EXPANSION BARS AND CLAMP BARS: ASTM A36 GRADE 36 STRUCTURAL STEEL - GALVANIZED TO ASTM A123.

RIVETS: RIVETS SHALL MEET THE REQUIREMENTS OF ASTM A502 FOR GRADE 1 RIVETS.

THE CUT ENDS OF GALVANIZED STEEL RAILING, AFTER GRINDING SMOOTH SHALL BE GIVEN TWO COATS OF ZINC RICH PAINT MEETING THE REQUIREMENTS OF FEDERAL SPECIFICATION MIL-P-26915 USAF TYPE 1, OR OF FEDERAL SPECIFICATIONS TT-P-641.

SHIMS: SHIMS SHALL MEET THE REQUIREMENTS OF ASTM A1011 FOR GRADE 36, 40, 45 OR ASTM A1008 FOR GRADE C AND SHALL BE GALVANIZED IN ACCORDANCE WITH ASTM A123.

RAIL CAPS: RAIL CAPS SHALL MEET THE REQUIREMENTS OF ASTM A1011 FOR GRADE 36, 40, 45 OR ASTM A1008 FOR GRADE C AND SHALL BE GALVANIZED IN ACCORDANCE WITH ASTM A123.

GENERAL NOTES

RAILING SHALL BE CONTINUOUS FROM END POST TO END POST OF BRIDGE. EACH JOINT IN RAIL LENGTH SHALL BE SPLICED AS DETAILED. PANEL LENGTHS OF RAIL SHALL BE ATTACHED TO A MINIMUM OF THREE POSTS. PLACE ONE JOINT SPLICE JUST BEYOND THE 3RD RAIL POST FROM EACH END, TYPICALLY 14' FROM THE END. PLACE OTHER JOINTS AS NEEDED.

FOR END OF RAIL TO CLEAR FACE OF CONCRETE END POST DIMENSION, SEE STANDARD NO. BMR7.

CAP SCREWS SHALL BE ASTM F593 ALLOY 305 STAINLESS STEEL. WASHERS FOR RAIL ATTACHMENT SHALL MEET THE REQUIREMENTS OF ASTM F844 EXCEPT THEY SHALL BE MADE FROM ALLOY 304 STAINLESS STEEL.

CERTIFIED MILL REPORTS ARE REQUIRED FOR RAILS AND POSTS. SHOP INSPECTION IS NOT REQUIRED.

METAL RAIL POSTS SHALL BE SET NORMAL TO CURB GRADE.

METHOD OF MEASUREMENT FOR METAL RAILS: FOR LENGTH OF METAL RAILS TO BE PAID FOR, SEE THE STANDARD SPECIFICATIONS.

CURVED RAIL USAGE: WHERE RAILS ARE TO BE USED ON BRIDGES ON HORIZONTAL AND/OR VERTICAL CURVATURE THE CONTRACTOR MAY, AT HIS OPTION, HAVE THE REQUIRED CURVATURE IN THE RAIL FORMED IN THE SHOP OR IN THE FIELD. IN EITHER EVENT, THE RAIL SHALL CONFORM WITHOUT BUCKLING OR KINKING TO THE REQUIRED CURVATURE IN A UNIFORM MANNER ACCEPTABLE TO THE ENGINEER.

TO INSURE FUTURE IDENTIFICATION OF THE FABRICATOR, A PERMANENT IDENTIFYING MARK SHALL BE PLACED ON EACH POST. THE METHOD OF MARKING AND LOCATION SHALL BE SUCH THAT IT DOES NOT DETRACT FROM THE APPEARANCE OF THE POST, BUT REMAIN VISIBLE AFTER RAIL PLACEMENT.

SHIMS SHALL BE USED AS NECESSARY FOR POST ALIGNMENT.

ALLOY 6351-T5 MAY BE SUBSTITUTED FOR ALLOY 6061-T6 WHERE APPLICABLE.

MINOR VARIATIONS IN DETAILS OF METAL RAIL WILL BE CONSIDERED. DETAILS OF SUCH VARIATIONS, IF DESIRED, SHALL BE SUBMITTED FOR APPROVAL.

PAY LENGTH = 194.7 LIN.FT.

PROJECT NO. BP9-R002

FORSYTH COUNTY

STATION: 15+96.00 -L-

SHEET 1 OF 3

STATE OF NORTH CAROLINA
DEPARTMENT OF TRANSPORTATION
RALEIGH
STANDARD

3 BAR METAL RAIL

NORTH CAROLINA PROFESSIONAL SEAL 057121 ENGINEER LAURA AMELIA KIRK
Digitally signed by
6/26/2026

STV Engineers, Inc.
2151 Hawkins St. Suite 1400
Charlotte, NC 28203
NC License Number F-0991

DOCUMENT NOT CONSIDERED FINAL UNLESS ALL SIGNATURES COMPLETED

REVISIONS						SHEET NO.
NO.	BY:	DATE:	NO.	BY:	DATE:	S-10
1			3			TOTAL SHEETS
2			4			21

DRAWN BY : FMW DATE : 4-25
CHECKED BY : LAD DATE : 7-25
DESIGN ENGINEER OF RECORD : L. DIAZ DATE : 11-25

khinm 6/26/2026 10:59:17 AM I:\Projects\4022560\4022560_000\50_Deliverables & Submittals\Structures\02 Ustation\05 RFC\40L019_BP9-R002_SMU_TBMRL010_33026i.dgn

STD. NO. BMR5

Docusign Envelope ID: 115861F0-3D8B-8D46-83DB-0EA8C2DB61A6

khinm 6/26/2026 10:59:18 AM I:\Projects\4022560\4022560_000\50_Deliverables & Submittals\Structures\02 Ustation\05 RFC\40L02LBP9-R002_SMU_TBMR2_OIL_33026i.dgn

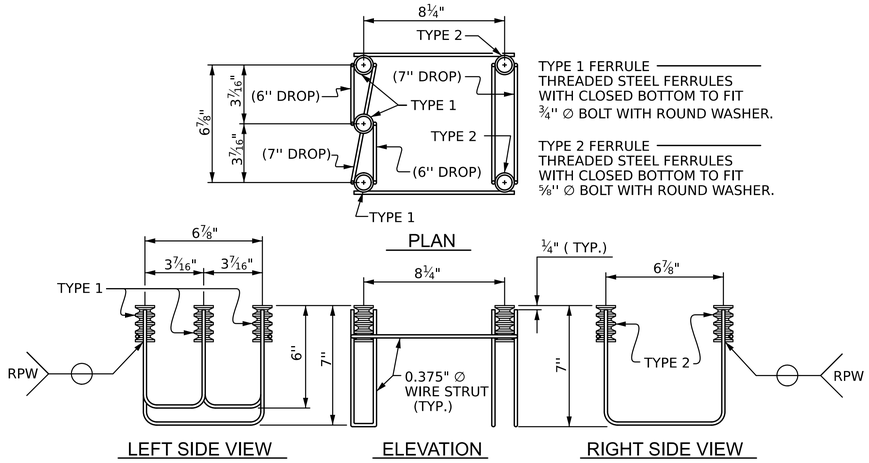

5-BOLT METAL RAIL ANCHOR ASSEMBLY

(34 ASSEMBLIES REQUIRED)

NOTES

STRUCTURAL CONCRETE ANCHOR ASSEMBLY

THE STRUCTURAL CONCRETE ANCHOR ASSEMBLY SHALL CONSIST OF THE FOLLOWING COMPONENTS:

A. FERRULES SHALL BE MADE FROM STEEL MEETING THE REQUIREMENTS OF AASHTO M169, GRADE 12L14 AND SHALL HAVE A MINIMUM LENGTH OF THREADS OF 2'' FOR ¾" FERRULES AND 1¾" FOR ⅝" FERRULES.

B. 3 - ¾" ∅ x 2½" BOLTS WITH WASHERS. BOLTS SHALL CONFORM TO THE REQUIREMENTS OF ASTM A307. BOLTS AND WASHERS SHALL BE GALVANIZED. AT THE CONTRACTOR'S OPTION, STAINLESS STEEL BOLTS AND WASHERS MAY BE USED AS AN ALTERNATE FOR THE ¾" ∅ x 2½" GALVANIZED BOLTS AND WASHERS. THEY SHALL CONFORM TO OR EXCEED THE MECHANICAL REQUIREMENTS OF ASTM A307. THE USE OF THIS ALTERNATE SHALL BE APPROVED BY THE ENGINEER.

C. 2 - ⅝" ∅ x 2¼" BOLTS WITH WASHERS. BOLTS SHALL CONFORM TO THE REQUIREMENTS OF ASTM A307. BOLTS AND WASHERS SHALL BE GALVANIZED. AT THE CONTRACTOR'S OPTION, STAINLESS STEEL BOLTS AND WASHERS MAY BE USED AS AN ALTERNATE FOR THE ⅝" ∅ x 2¼" GALVANIZED BOLTS AND WASHERS. THEY SHALL CONFORM TO OR EXCEED THE MECHANICAL REQUIREMENTS OF ASTM A307. THE USE OF THIS ALTERNATE SHALL BE APPROVED BY THE ENGINEER.

D. WIRE STRUT SHOWN IN THE CONCRETE ANCHOR ASSEMBLY DETAIL IS THE MINIMUM ALLOWABLE SIZE AND SHALL HAVE A MINIMUM TENSILE STRENGTH OF 100,000 PSI. AS AN OPTION, A 7⁄16" ∅ WIRE STRUT WITH A MINIMUM TENSILE STRENGTH OF 90,000 PSI IS ACCEPTABLE.

E. THE METAL RAIL ANCHOR ASSEMBLIES TO BE HOT DIPPED GALVANIZED TO CONFORM TO REQUIREMENTS OF ASTM A123

F. THE COST OF THE METAL RAIL ANCHOR ASSEMBLY WITH BOLTS AND WASHERS COMPLETE IN PLACE SHALL BE INCLUDED IN THE PRICE BID FOR LINEAR FEET OF METAL RAIL.

G. BOLTS TO BE TIGHTENED ONE-HALF TURN WITH A WRENCH FROM A FINGER-TIGHT POSITION.

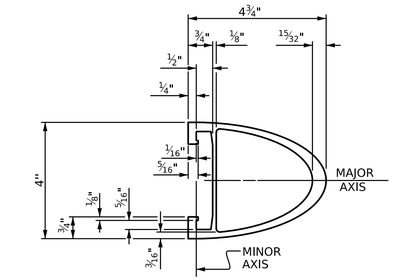

TOP & MIDDLE RAIL SECTION

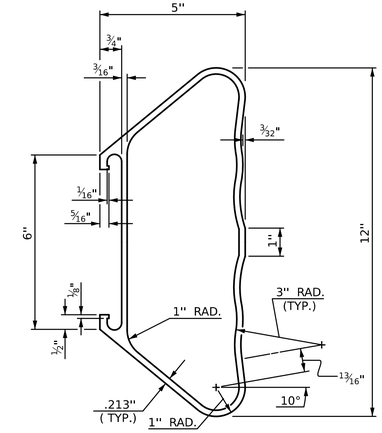

BOTTOM RAIL SECTION

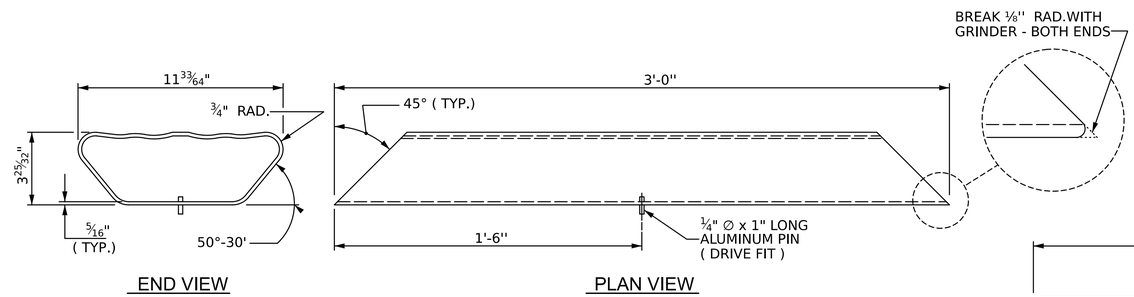

BOTTOM RAIL EXPANSION BAR

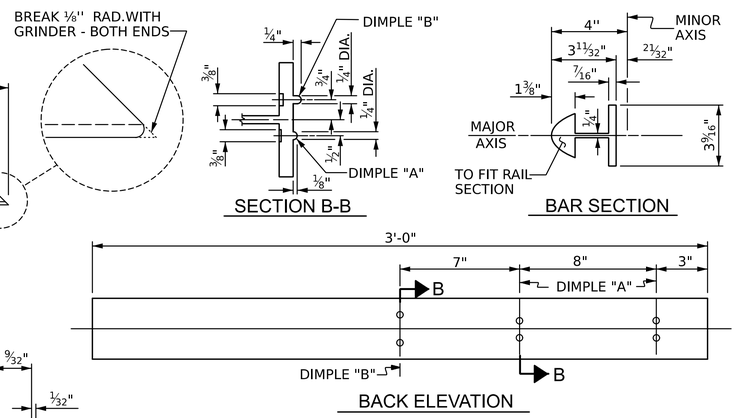

TOP & MIDDLE RAIL EXPANSION BAR

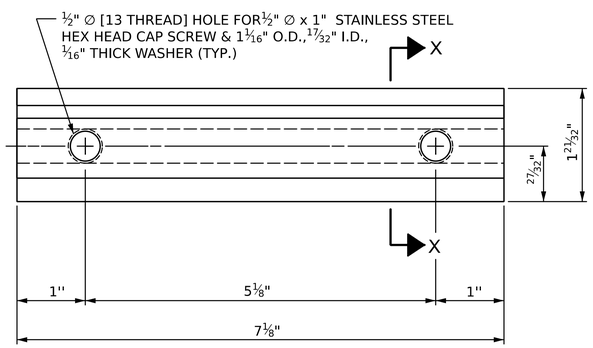

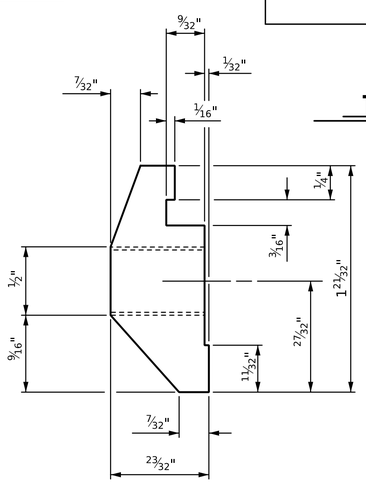

CLAMP BAR DETAIL

(6 REQUIRED PER POST)

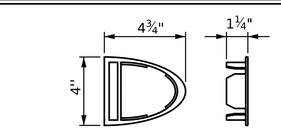

TOP & MIDDLE RAIL CAP

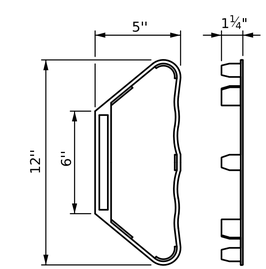

BOTTOM RAIL CAP

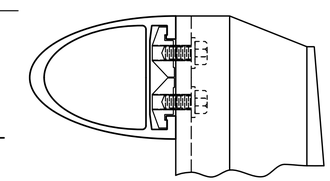

CLAMP ASSEMBLY

TOP RAIL SHOWN
(MIDDLE & BOTTOM RAIL ARE SIMILAR)

PROJECT NO. BP9-R002

FORSYTH COUNTY

STATION: 15+96.00 -L-

SHEET 2 OF 3

STV Engineers, Inc.
2151 Hawkins St. Suite 1400
Charlotte, NC 28203
NC License Number F-0991

DOCUMENT NOT CONSIDERED FINAL UNLESS ALL SIGNATURES COMPLETED

STATE OF NORTH CAROLINA
DEPARTMENT OF TRANSPORTATION
RALEIGH

STANDARD

3 BAR METAL RAIL

DRAWN BY : FMW	DATE : 4-25		
CHECKED BY : LAD	DATE : 7-25		
DESIGN ENGINEER OF RECORD : L. DIAZ	DATE : 11-25		

REVISIONS							SHEET NO.
NO	BY:	DATE:	NO	BY:	DATE:		S-11
1			3				TOTAL SHEETS
2			4				21

STD. NO. BMR6

Docusign Envelope ID: 115861F0-3D8B-8D46-83DB-0EA8C2DB61A6

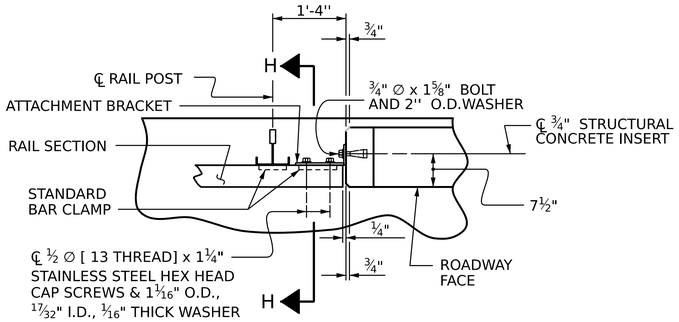

PLAN OF RAIL AND END POST

(STIFFENER ON ½" ℙ NOT SHOWN FOR CLARITY)

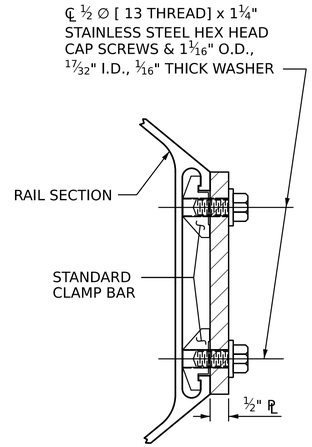

SECTION H-H

(FOR BOTTOM RAIL)

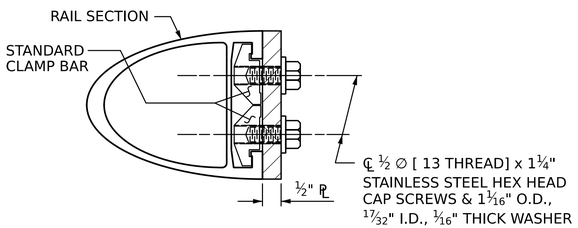

SECTION H-H

(FOR TOP & MIDDLE RAIL)

NOTES

METAL RAIL TO END POST CONNECTION

THE METAL RAIL TO END POST CONNECTION SHALL CONSIST OF THE FOLLOWING COMPONENTS:

A. ½" PLATES SHALL CONFORM TO ASTM A36 GRADE 36 AND SHALL BE GALVANIZED AFTER FABRICATION.

B. ¾" STRUCTURAL CONCRETE INSERT SHALL HAVE A WORKING LOAD SHEAR CAPACITY OF 4800 LBS. THE FERRULES SHALL ENGAGE A ¾" ∅ x 1⅝" BOLT WITH 2'' O.D. WASHER IN PLACE. THE ¾" ∅ x 1⅝" BOLT SHALL HAVE N.C. THREADS.

C. CAP SCREWS FOR RAIL ATTACHMENT TO ANGLE SHALL CONFORM TO THE REQUIREMENTS OF ASTM F593 ALLOY 305 STAINLESS STEEL. CAP SCREWS TO BE CENTERED IN SLOTS AT 60°F. WASHERS FOR RAIL ATTACHMENT SHALL MEET THE REQUIREMENTS OF ASTM F844 EXCEPT THEY SHALL BE MADE FROM ALLOY 304 STAINLESS STEEL.

D. STANDARD CLAMP BARS (STD. No. BMR6).

THE COST OF THE STANDARD CLAMP BARS AND CAP SCREWS USED IN THE METAL RAIL TO END POST CONNECTION SHALL BE INCLUDED IN THE UNIT CONTRACT PRICE BID FOR LINEAR FEET OF 3 BAR METAL RAIL.

THE ¾" STRUCTURAL CONCRETE INSERT WITH BOLT SHALL BE ASSEMBLED IN THE SHOP.

THE COST OF THE ¾" STRUCTURAL CONCRETE INSERT ASSEMBLY, AND THE ½" PLATES COMPLETE IN PLACE SHALL BE INCLUDED IN THE VARIOUS PAY ITEMS.

THE CONTRACTOR, AT HIS OPTION, MAY USE AN ADHESIVE BONDING SYSTEM IN LIEU OF THE STRUCTURAL CONCRETE INSERT EMBEDDED IN THE END POST. IF THE ADHESIVE BONDING SYSTEM IS USED, THE ¾" ∅ x 1⅝" BOLT WITH WASHER SHALL BE REPLACED WITH A ¾" ∅ x 6½" BOLT AND 2'' O.D.WASHER. ALL SPECIFICATIONS THAT APPLY TO THE ¾" ∅ x 1⅝" BOLT SHALL APPLY TO THE ¾" ∅ x 6½" BOLT. FIELD TESTING OF THE ADHESIVE BONDING SYSTEM IS NOT REQUIRED.

NOTES

STRUCTURAL CONCRETE INSERT

THE STRUCTURAL CONCRETE INSERT ASSEMBLY SHALL CONSIST OF THE FOLLOWING COMPONENTS:

A. FERRULES SHALL BE MADE FROM STEEL MEETING THE REQUIREMENTS OF AASHTO M169, GRADE 12L14 AND SHALL HAVE A MINIMUM LENGTH OF THREADS OF 1½".

B. 1 - ¾" ∅ x 1⅝" BOLT WITH WASHER. BOLT SHALL CONFORM TO THE REQUIREMENTS OF ASTM A307. BOLT AND WASHER SHALL BE GALVANIZED. AT THE CONTRACTORS OPTION, STAINLESS STEEL BOLT AND WASHER MAY BE USED AS AN ALTERNATE FOR THE ¾" ∅ x 1⅝" GALVANIZED BOLT AND WASHER. THEY SHALL CONFORM TO OR EXCEED THE MECHANICAL REQUIREMENTS OF ASTM A307. THE USE OF THIS ALTERNATE SHALL BE APPROVED BY THE ENGINEER.

C. WIRE STRUT SHOWN IN THE CONCRETE INSERT ASSEMBLY DETAIL IS THE MINIMUM ALLOWABLE SIZE AND SHALL HAVE A MINIMUM TENSILE STRENGTH OF 100,000 PSI. AS AN OPTION, A 7/16" ∅ WIRE STRUT WITH A MINIMUM TENSILE STRENGTH OF 90,000 PSI IS ACCEPTABLE.

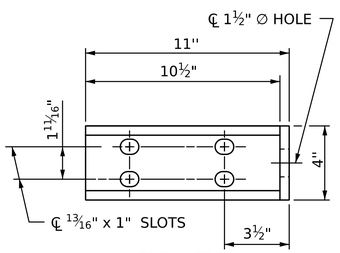

ELEVATION

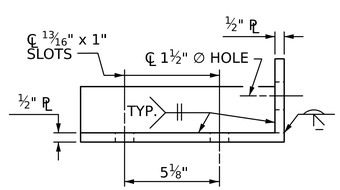

PLAN

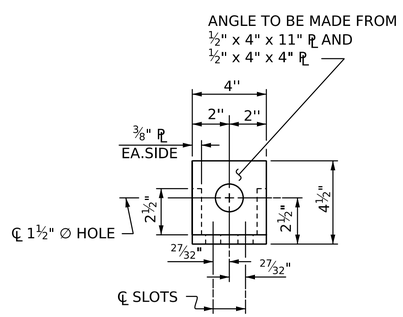

END VIEW

(FIX. AND EXP.)

DETAILS FOR ATTACHMENT BRACKET

(TOP & MIDDLE RAIL ONLY)

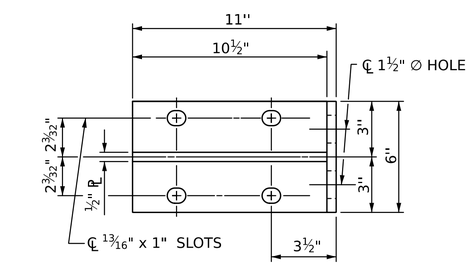

ELEVATION

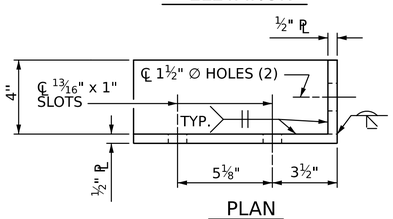

PLAN

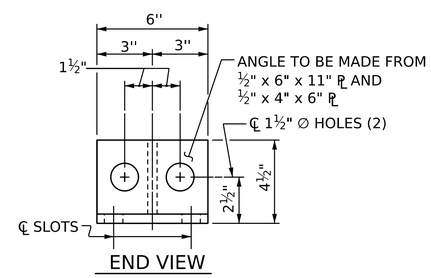

END VIEW

DETAILS FOR ATTACHMENT BRACKET

(BOTTOM RAIL ONLY)

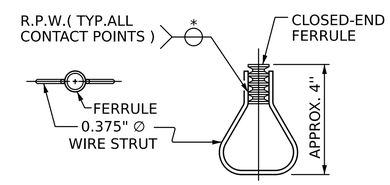

PLAN ELEVATION

STRUCTURAL CONCRETE INSERT

* EACH WELDED ATTACHMENT OF WIRE TO FERRULE SHALL DEVELOP THE TENSILE STRENGTH OF THE WIRE.

PROJECT NO. BP9-R002

FORSYTH COUNTY

STATION: 15+96.00 -L-

SHEET 3 OF 3

STATE OF NORTH CAROLINA
DEPARTMENT OF TRANSPORTATION
RALEIGH

STANDARD

3 BAR METAL RAIL

NORTH CAROLINA PROFESSIONAL SEAL 057121 ENGINEER LAURA AMELIA DIAZ
Signed by:
6/26/2026

STV Engineers, Inc.
2151 Hawkins St. Suite 1400
Charlotte, NC 28203
NC License Number F-0991

DOCUMENT NOT CONSIDERED FINAL UNLESS ALL SIGNATURES COMPLETED

REVISIONS						SHEET NO.
NO	BY:	DATE:	NO	BY:	DATE:	S-12
1			3			TOTAL SHEETS
2			4			21

DRAWN BY :	FMW	DATE :	4-25
CHECKED BY :	LAD	DATE :	7-25
DESIGN ENGINEER OF RECORD :	L. DIAZ	DATE :	11-25

khlnm 6/26/2026 10:59:19 AM I:\Projects\4022560\4022560_000\50_Deliverables & Submittals\Structures\02 Ustation\05 RFC\401_023_BP9-R002_SMU_TBMR3_01_33026L.dgn

STD. NO. BMR7

Docusign Envelope ID: 115861F0-3D8B-8D46-83DB-0EA8C2DB61A6

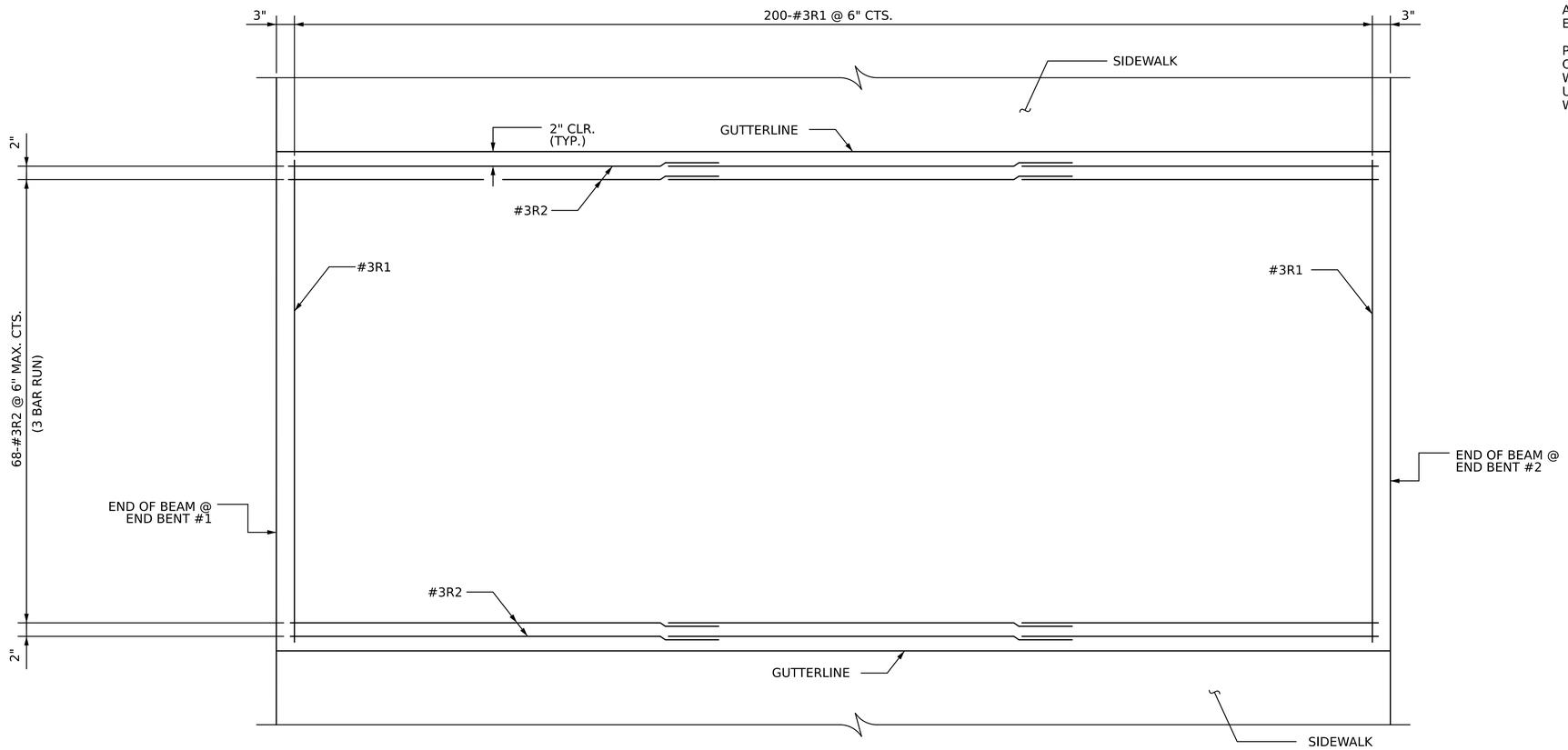

PLAN SHOWING CONCRETE WEARING SURFACE REINFORCING STEEL

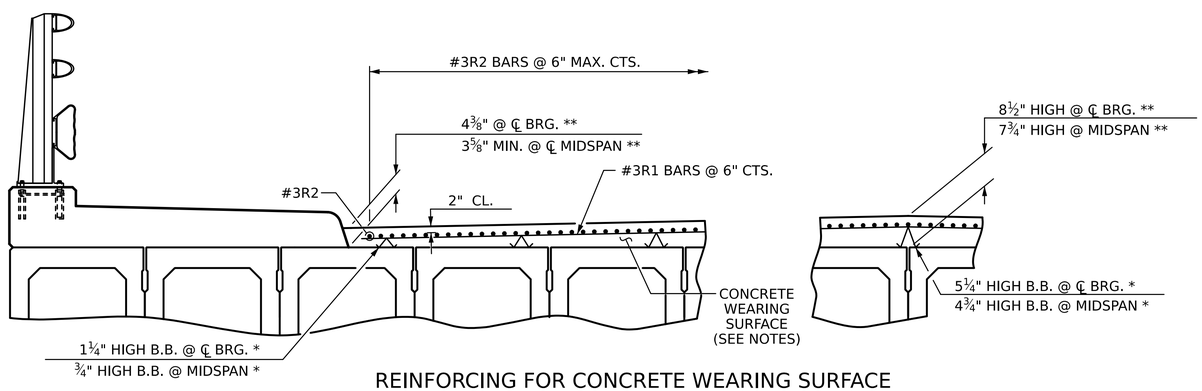

REINFORCING FOR CONCRETE WEARING SURFACE

LEFT SIDE SHOWN, RIGHT SIDE SIMILAR

* BEAM BOLSTERS (B.B.) SHALL BE PLACED AT 2'-0" CENTERS
** BASED ON PREDICTED FINAL CAMBER AND THEORETICAL GRADE THE MINIMUM AND MAXIMUM CONCRETE WEARING SURFACE THICKNESSES ARE SHOWN. THE HEIGHT OF THE CONCRETE WEARING SURFACE THICKNESS VARIES WHILE IT FOLLOWS THE PROFILE OF THE GUTTERLINE.

NOTES:

ALL REINFORCING STEEL IN CONCRETE WEARING SURFACE SHALL BE EPOXY COATED

PLACEMENT OF THE CONCRETE WEARING SURFACE SHALL OCCUR AFTER CASTING THE CONCRETE RAIL. THE COST OF THE #3 BARS AND CAST WITH THE CONCRETE WEARING SURFACE SHALL BE INCLUDED IN THE UNIT PRICE BID FOR CONCRETE WEARING SURFACE. FOR CONCRETE WEARING SURFACE, SEE SPECIAL PROVISIONS.

BILL OF MATERIAL FOR CONCRETE WEARING SURFACE

BAR	NO.	SIZE	TYPE	LENGTH	WEIGHT
* R1	200	#3	STR	33'-11"	2,551
* R2	204	#3	STR	34'-3"	2,627
* EPOXY COATED REINFORCING STEEL				LBS.	5,178
CONCRETE WEARING SURFACE				SQ. FT.	3,425

SPLICE LENGTH CHART

BAR SIZE	EPOXY COATED
#3	1'-6"

GROOVING BRIDGE FLOORS

APPROACH SLABS:	1,542	SQ.FT.
BRIDGE DECK:	3,115	SQ.FT.
TOTAL:	4,657	SQ.FT.

PROJECT NO. BP9-R002

FORSYTH COUNTY

STATION: 15+96.00 -L-

STV Engineers, Inc.
2151 Hawkins St. Suite 1400
Charlotte, NC 28203
NC License Number F-0991

DOCUMENT NOT CONSIDERED FINAL UNLESS ALL SIGNATURES COMPLETED

STATE OF NORTH CAROLINA
DEPARTMENT OF TRANSPORTATION
RALEIGH

CONCRETE WEARING SURFACE

REVISIONS						SHEET NO.
NO	BY:	DATE:	NO	BY:	DATE:	S-13
1			3			TOTAL SHEETS
2			4			21

DRAWN BY :	FMW	DATE :	5-25
CHECKED BY :	LAD	DATE :	8-25
DESIGN ENGINEER OF RECORD :	L. DIAZ	DATE :	11-25

khinm 6/26/2026 10:59:20 AM i:\Projects\4022560\4022560_000\50_Deliverables & Submittals\Structures\02 Ustation\05 RFC\401_025_BP9-R002_SMU_CO_013_33026i.dgn

Docusign Envelope ID: 115861F0-3D8B-8D46-83DB-0EA8C2DB61A6

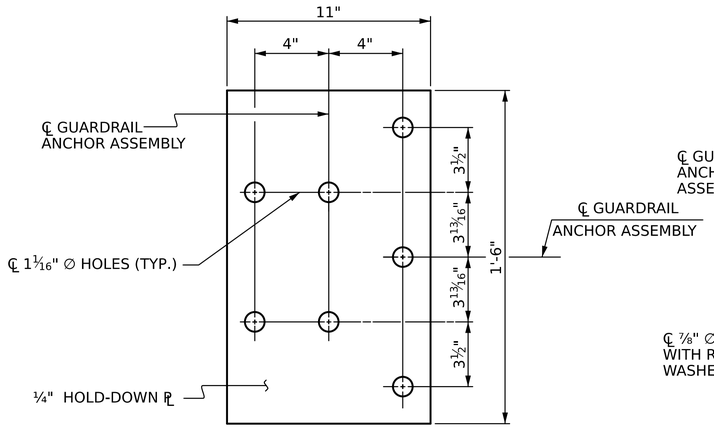

PLAN

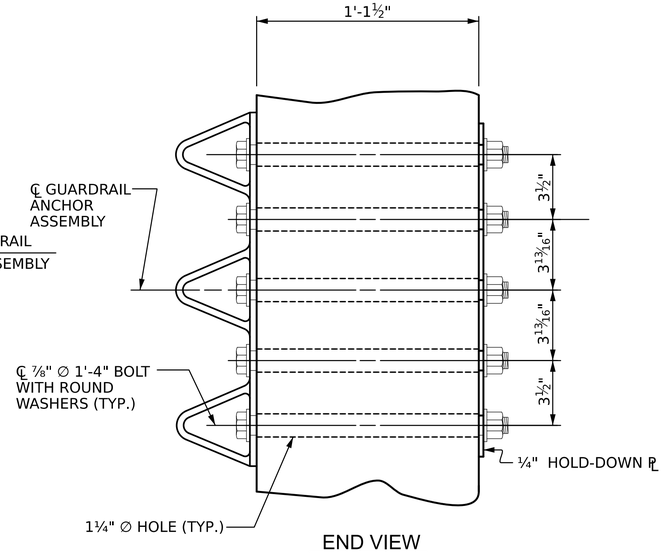

END VIEW

GUARDRAIL ANCHOR ASSEMBLY DETAILS

NOTES

THE GUARDRAIL ANCHOR ASSEMBLY SHALL CONSIST OF A ¼" HOLD DOWN PLATE AND 7 - ⅞" ∅ BOLTS WITH NUTS AND WASHERS.

THE HOLD-DOWN PLATE SHALL CONFORM TO AASHTO M270 GRADE 36. AFTER FABRICATION, THE HOLD-DOWN PLATE SHALL BE HOT-DIP GALVANIZED IN ACCORDANCE WITH AASHTO M111.

BOLTS SHALL CONFORM TO THE REQUIREMENTS OF ASTM A307 AND NUTS SHALL CONFORM TO THE REQUIREMENTS OF AASHTO M291. BOLTS, NUTS AND WASHERS SHALL BE GALVANIZED. AT THE CONTRACTOR'S OPTION, STAINLESS STEEL BOLTS, NUTS AND WASHERS MAY BE USED AS AN ALTERNATE FOR THE ⅞" ∅ GALVANIZED BOLTS, NUTS AND WASHERS. THEY SHALL CONFORM TO OR EXCEED THE MECHANICAL REQUIREMENTS OF ASTM A307. THE USE OF THIS ALTERNATE SHALL BE APPROVED BY THE ENGINEER.

THE GUARDRAIL ANCHOR ASSEMBLY IS REQUIRED AT ALL POINTS WHERE APPROACH GUARDRAIL IS TO BE ATTACHED TO THE END OF THE PARAPET. FOR POINTS OF ATTACHMENT, SEE SKETCH.

AFTER INSTALLATION, THE EXPOSED THREAD OF THE BOLT SHALL BE BURRED WITH A SHARP POINTED TOOL.

THE COST OF THE GUARDRAIL ANCHOR ASSEMBLIES WITH BOLTS, NUTS AND WASHERS COMPLETE IN PLACE, SHALL BE INCLUDED IN THE VARIOUS PAY ITEMS.

THE VERTICAL REINFORCING BARS MAY BE SHIFTED SLIGHTLY IN THE END POST TO CLEAR ASSEMBLY BOLTS.

THE 1 ¼" ∅ HOLES SHALL BE FORMED OR DRILLED WITH A CORE BIT. IMPACT TOOLS WILL NOT BE PERMITTED. ANY CONCRETE DAMAGED BY THIS WORK SHALL BE REPAIRED TO THE SATISFACTION OF THE ENGINEER.

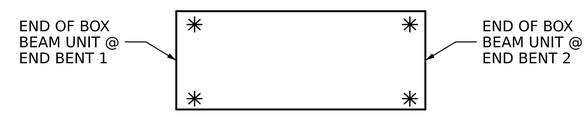

SKETCH SHOWING POINTS OF ATTACHMENT

* LOCATION OF GUARDRAIL ATTACHMENT

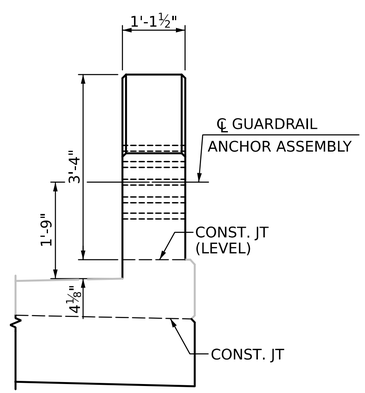

END VIEW
(THREE BAR METAL RAIL)

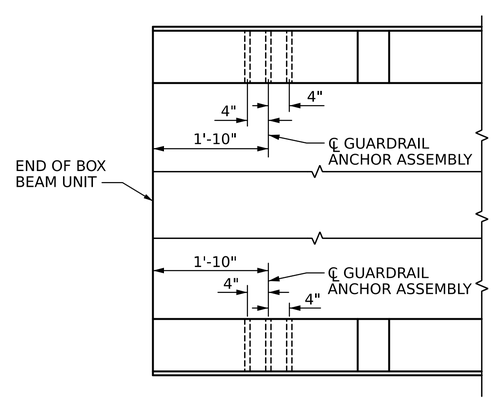

PLAN

LOCATION OF GUARDRAIL ANCHOR AT END POST

PROJECT NO. BP9-R002

FORSYTH COUNTY

STATION: 15+96.00 -L-

STATE OF NORTH CAROLINA
DEPARTMENT OF TRANSPORTATION
RALEIGH
STANDARD

GUARDRAIL ANCHORAGE DETAILS FOR METAL RAILS

NORTH CAROLINA PROFESSIONAL SEAL 057121 ENGINEER DIAZ, AMELIA DINA
Signed by:
6/26/2026

STV Engineers, Inc.
2151 Hawkins St. Suite 1400
Charlotte, NC 28203
NC License Number F-0991

DOCUMENT NOT CONSIDERED FINAL UNLESS ALL SIGNATURES COMPLETED

REVISIONS						SHEET NO.
NO	BY:	DATE:	NO	BY:	DATE:	S-14
1			3			TOTAL SHEETS
2			4			21

DRAWN BY :	FMW	DATE :	4-25
CHECKED BY :	LAD	DATE :	8-25
DESIGN ENGINEER OF RECORD :	L. DIAZ	DATE :	11-25

khinm 6/26/2026 10:59:21 AM I:\Projects\4022560\4022560_000\50_Deliverables & Submittals\Structures\02 Ustation\05 RFC\40L027_BP9-R002_SMU_GR_0l4_33026l.dgn

Docusign Envelope ID: 115861F0-3D8B-8D46-83DB-0EA8C2DB61A6

I:\Projects\4022560\4022560_0001\50_Deliverables & Submittals\Structures\02 Ustation\05 RFC\40L029_BP9-R002_SMU_EBL015_33026L.dgn 6/26/2026 10:59:22 AM khinm

NOTES

STIRRUPS IN CAP MAY BE SHIFTED AS NECESSARY TO CLEAR DOWELS.

FOR WING DETAILS, SEE SHEET 3 OF 4.

FOR PILE SPLICE DETAILS, SEE SHEET 4 OF 4.

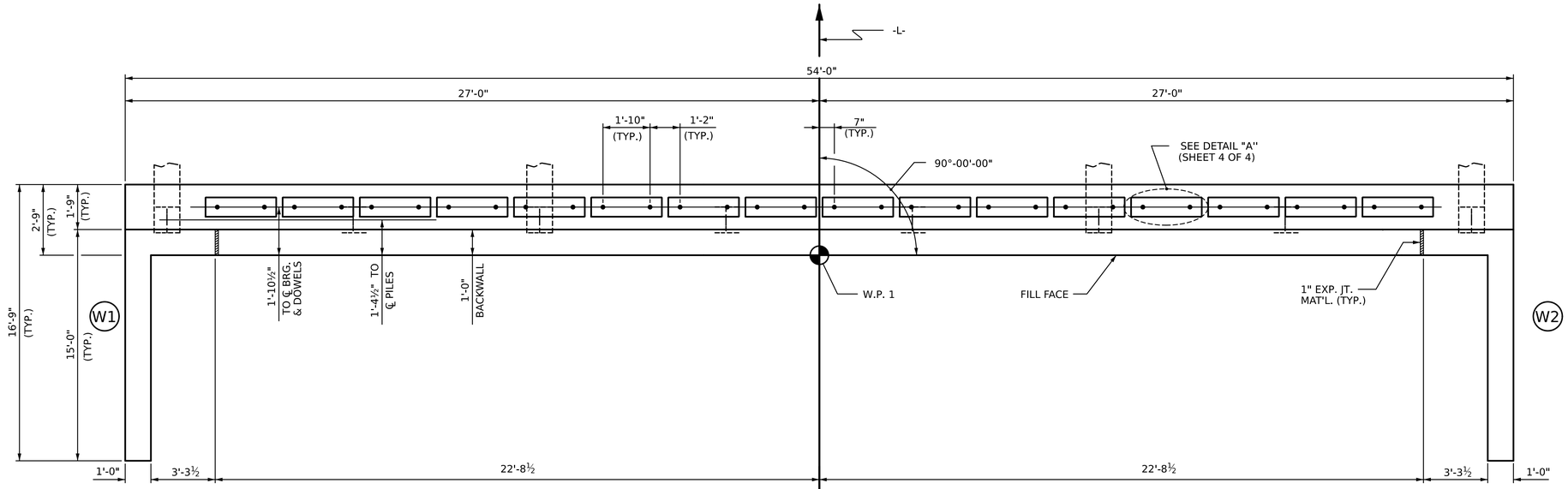

PLAN

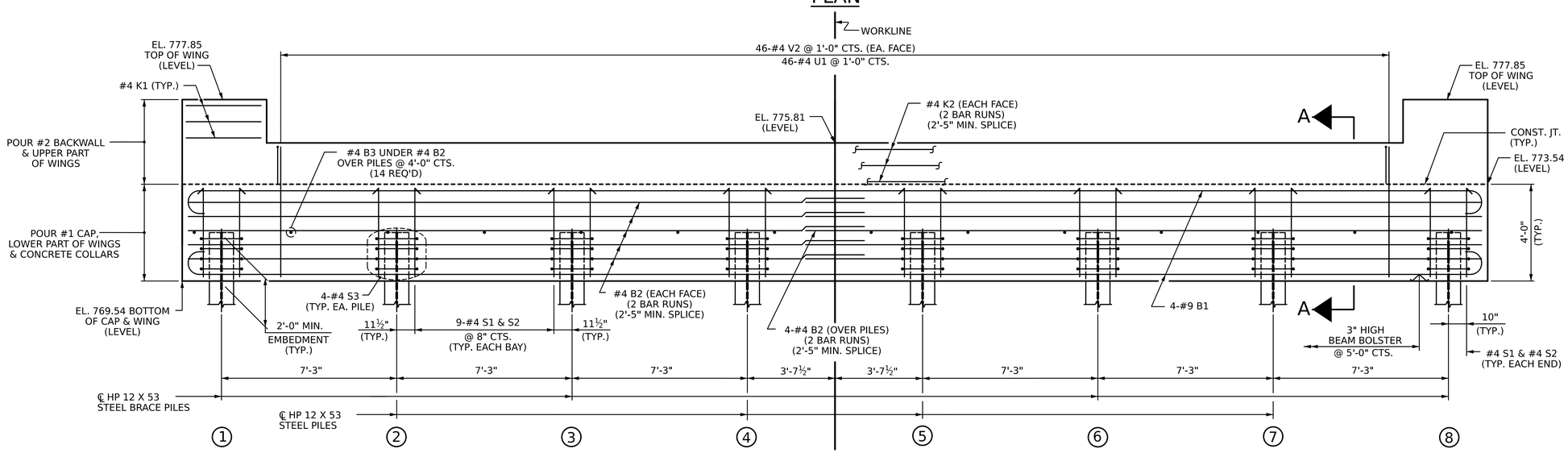

ELEVATION

WINGS NOT SHOWN FOR CLARITY.
FOR SECTION A-A, SEE SHEET 4 OF 4.
CONCRETE COLLARS FOR STEEL PILES NOT SHOWN IN PLAN AND ELEVATION VIEWS FOR CLARITY.
SEE "CORROSION PROTECTION FOR STEEL PILES DETAIL", SHEET 4 OF 4.

PROJECT NO. BP9-R002

FORSYTH COUNTY

STATION: 15+96.00 -L-

SHEET 1 OF 4

NORTH CAROLINA PROFESSIONAL SEAL 057121 ENGINEER AMELIA DIAZ
Signed by:
6/26/2026

STV Engineers, Inc.
2151 Hawkins St. Suite 1400
Charlotte, NC 28203
NC License Number F-0991

DOCUMENT NOT CONSIDERED FINAL UNLESS ALL SIGNATURES COMPLETED

STATE OF NORTH CAROLINA
DEPARTMENT OF TRANSPORTATION
RALEIGH

SUBSTRUCTURE

END BENT No. 1

REVISIONS						SHEET NO.
NO	BY:	DATE:	NO	BY:	DATE:	S-15
1			3			TOTAL SHEETS
2			4			21

DRAWN BY :	FMW	DATE :	4-25
CHECKED BY :	LAD	DATE :	7-25
DESIGN ENGINEER OF RECORD :	L. DIAZ	DATE :	11-25

Docusign Envelope ID: 115861F0-3D8B-8D46-83DB-0EA8C2DB61A6

I:\Projects\4022560\4022560_000I\50_Deliverables & Submittals\Structures\02 Ustation\05 RFC\40L03L_BP9-R002_SMU_EB2_016_33026I.dgn
6/26/2026 10:59:23 AM
khinm

NOTES

STIRRUPS IN CAP MAY BE SHIFTED AS NECESSARY TO CLEAR DOWELS.

FOR WING DETAILS, SEE SHEET 3 OF 4.

FOR PILE SPLICE DETAILS, SEE SHEET 4 OF 4.

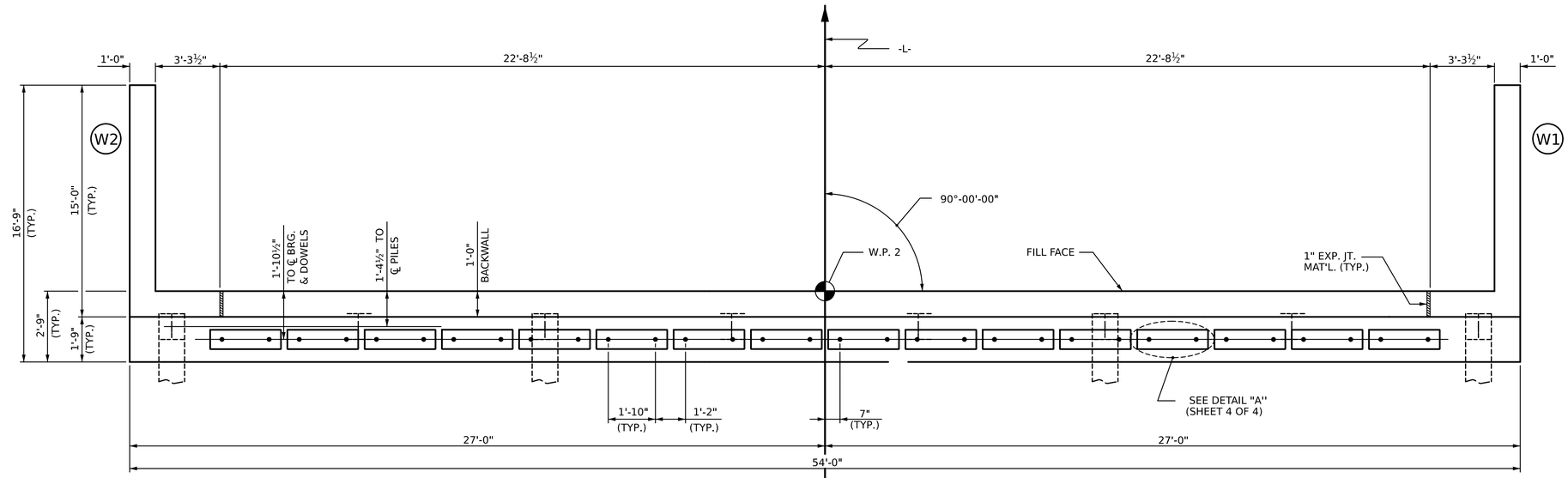

PLAN

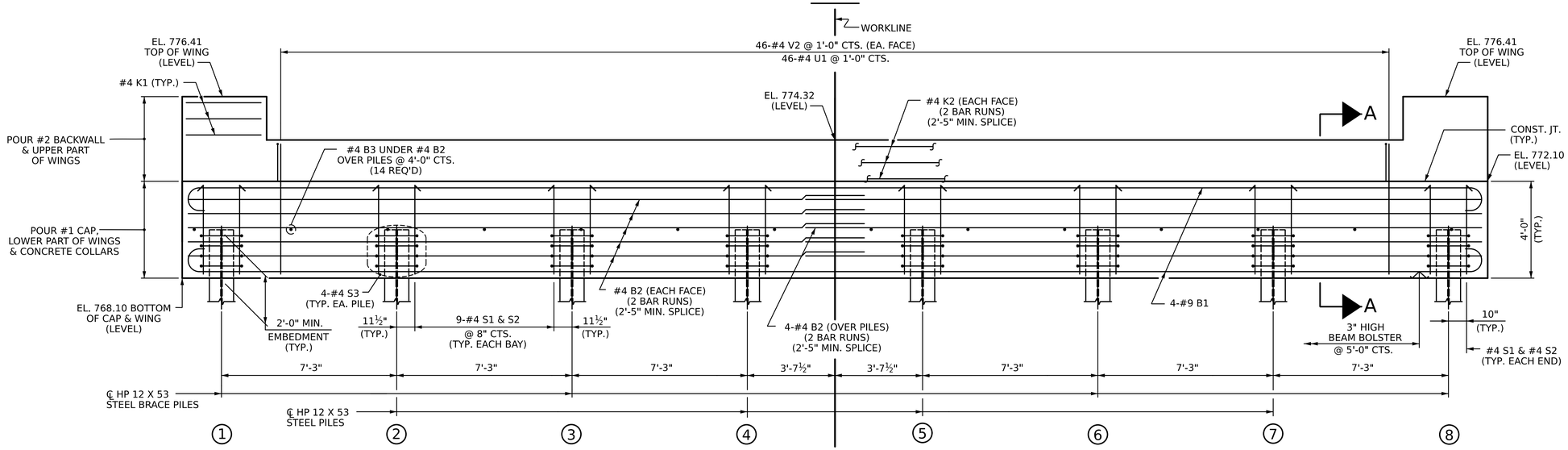

ELEVATION

WINGS NOT SHOWN FOR CLARITY.
FOR SECTION A-A, SEE SHEET 4 OF 4.
CONCRETE COLLARS FOR STEEL PILES NOT SHOWN IN PLAN AND ELEVATION VIEWS FOR CLARITY.
SEE "CORROSION PROTECTION FOR STEEL PILES DETAIL", SHEET 4 OF 4.

PROJECT NO. BP9-R002

FORSYTH COUNTY

STATION: 15+96.00 -L-

SHEET 2 OF 4

STATE OF NORTH CAROLINA
DEPARTMENT OF TRANSPORTATION
RALEIGH

SUBSTRUCTURE

END BENT No. 2

NORTH CAROLINA PROFESSIONAL SEAL 057121 ENGINEER LUIS AMELIA DIAZ
Signed by:
6/26/2026

STV Engineers, Inc.
2151 Hawkins St. Suite 1400
Charlotte, NC 28203
NC License Number F-0991

DOCUMENT NOT CONSIDERED FINAL UNLESS ALL SIGNATURES COMPLETED

DRAWN BY :	FMW	DATE :	4-25
CHECKED BY :	LAD	DATE :	7-25
DESIGN ENGINEER OF RECORD :	L. DIAZ	DATE :	11-25

REVISIONS						SHEET NO.
NO	BY:	DATE:	NO	BY:	DATE:	S-16
1			3			TOTAL SHEETS
2			4			21

Docusign Envelope ID: 115861F0-3D8B-8D46-83DB-0EA8C2DB61A6

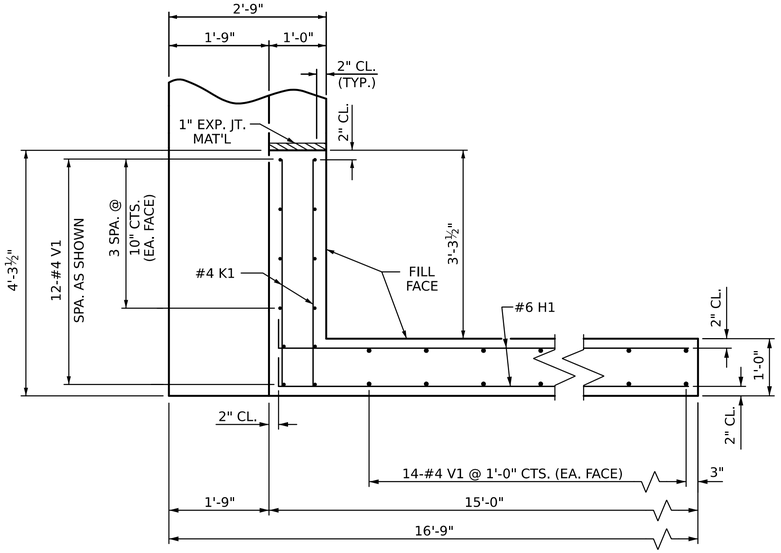

PLAN OF WING W1

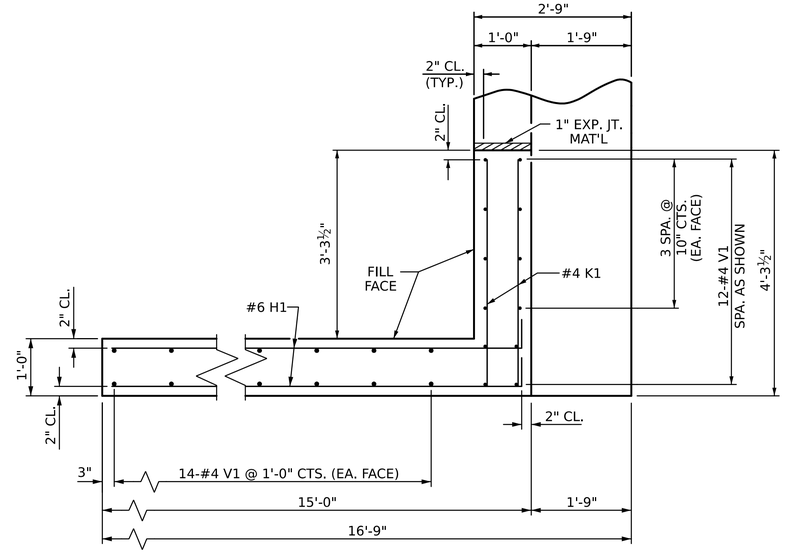

PLAN OF WING W2

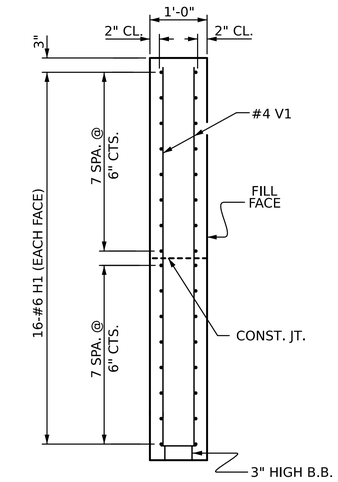

SECTION X-X

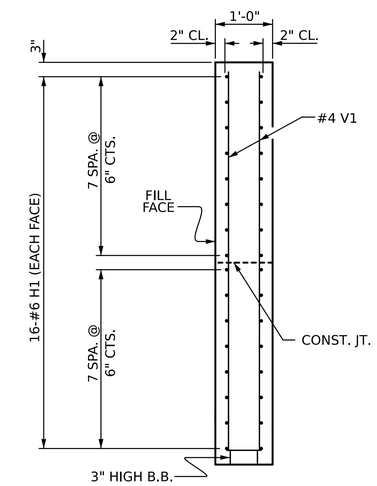

SECTION Y-Y

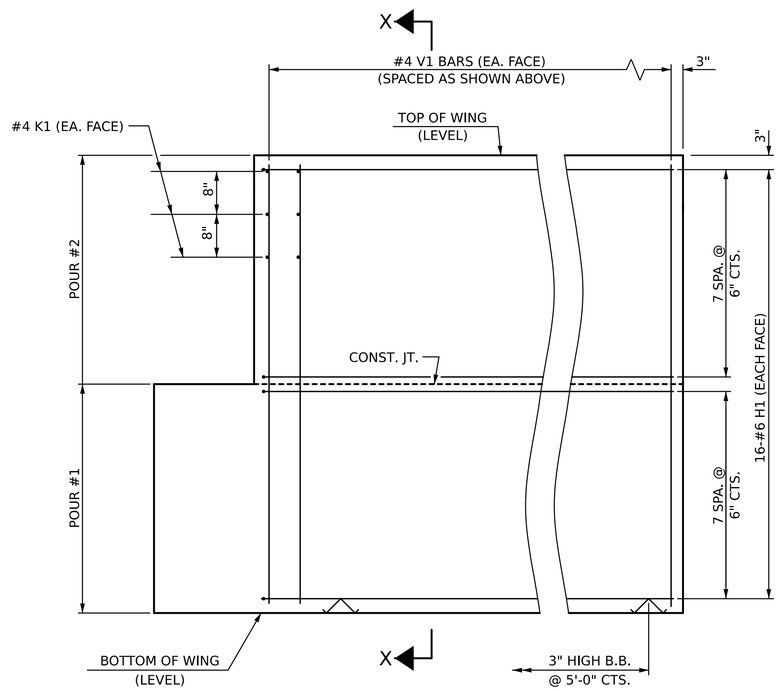

ELEVATION OF WING W1

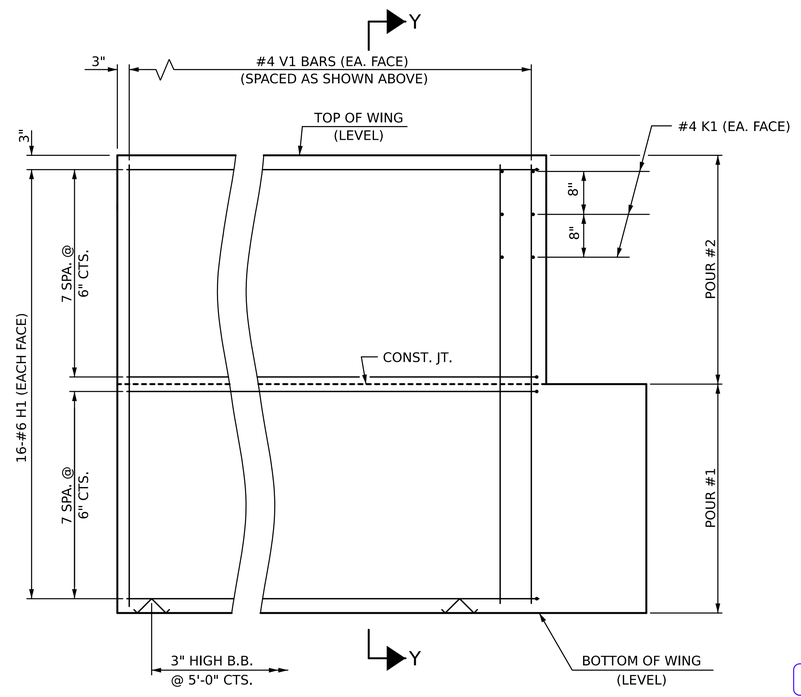

ELEVATION OF WING W2

WING DETAILS

PROJECT NO. BP9-R002

FORSYTH COUNTY

STATION: 15+96.00 -L-

SHEET 3 OF 4

STATE OF NORTH CAROLINA
DEPARTMENT OF TRANSPORTATION
RALEIGH

SUBSTRUCTURE

END BENT
WING DETAILS

NORTH CAROLINA PROFESSIONAL SEAL 057121 ENGINEER LUIS AMELIA DIAZ
Digitally signed by:
6/26/2026

STV Engineers, Inc.
2151 Hawkins St. Suite 1400
Charlotte, NC 28203
NC License Number F-0991

DOCUMENT NOT CONSIDERED FINAL UNLESS ALL SIGNATURES COMPLETED

REVISIONS						SHEET NO.
NO	BY:	DATE:	NO	BY:	DATE:	S-17
1			3			TOTAL SHEETS
2			4			21

DRAWN BY :	FMW	DATE :	4-25
CHECKED BY :	LAD	DATE :	7-25
DESIGN ENGINEER OF RECORD :	L. DIAZ	DATE :	11-25

khinm 6/26/2026 10:59:24 AM i:\Projects\4022560\4022560_000\50_Deliverables & Submittals\Structures\02 Ustation\05 RFC\40L033_BP9-R002_SMU_EB3_OI7_33026i.dgn

Docusign Envelope ID: 115861F0-3D8B-8D46-83DB-0EA8C2DB61A6

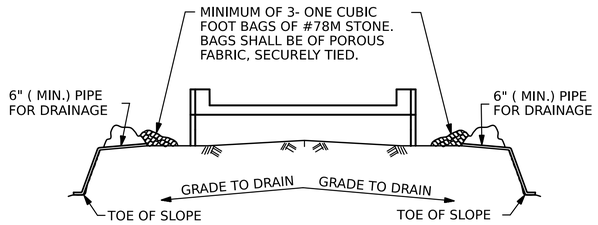

BAGGED STONE AND PIPE SHALL BE PLACED IMMEDIATELY AFTER COMPLETION OF END BENT EXCAVATION. PIPE MAY BE EITHER CONCRETE, CORRUGATED STEEL, CORRUGATED ALUMINUM ALLOY, OR CORRUGATED PLASTIC. PERFORATED PIPE WILL NOT BE ALLOWED.

BAGGED STONE SHALL REMAIN IN PLACE UNTIL THE ENGINEER DIRECTS THAT IT BE REMOVED. THE CONTRACTOR SHALL REMOVE AND DISPOSE OF SILT ACCUMULATIONS AT BAGGED STONE WHEN SO DIRECTED BY THE ENGINEER. BAGS SHALL BE REMOVED AND REPLACED WHENEVER THE ENGINEER DETERMINES THAT THEY HAVE DETERIORATED AND LOST THEIR EFFECTIVENESS.

NO SEPARATE PAYMENT WILL BE MADE FOR THIS WORK AND THE ENTIRE COST OF THIS WORK SHALL BE INCLUDED IN THE UNIT CONTRACT PRICE BID FOR THE SEVERAL PAY ITEMS.

TEMPORARY DRAINAGE AT END BENT

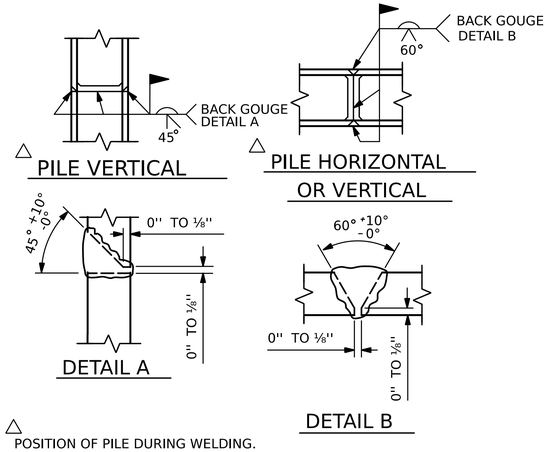

PILE SPLICE DETAILS

BAR TYPES

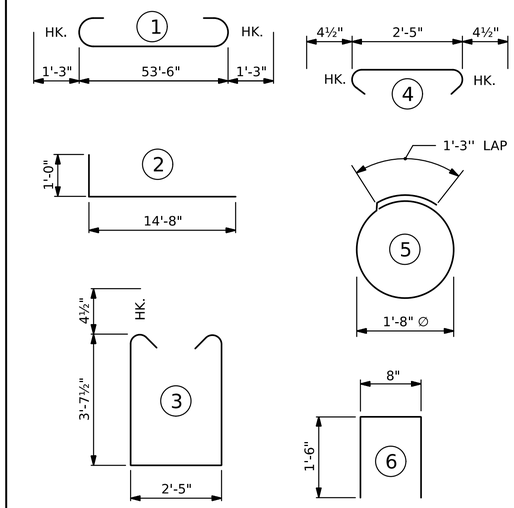

ALL BAR DIMENSIONS ARE OUT TO OUT.

BILL OF MATERIAL

FOR ONE END BENT

BAR	NO.	SIZE	TYPE	LENGTH	WEIGHT
B1	8	#9	1	56'-0	1,523
B2	28	#4	STR	28'-7"	535
B3	14	#4	STR	2'-5"	23
D1	32	#8	STR	2'-3"	192
H1	64	#6	2	15'-8"	1,506
K1	12	#4	STR	3'-11"	31
K2	24	#4	STR	28'-7"	229
S1	65	#4	3	10'-5"	452
S2	65	#4	4	3'-2"	137
S3	32	#4	5	6'-6"	139
U1	46	#4	6	3'-8"	113
V1	80	#4	STR	7'-10"	419
V2	92	#4	STR	5'-10"	369
REINFORCING STEEL (FOR ONE END BENT)					5,668 LBS.

CLASS A CONCRETE BREAKDOWN (FOR ONE END BENT)

POUR #1	CAP, LOWER PART OF WINGS & COLLARS	27.8 C.Y.
POUR #2	BACKWALL & UPPER PART OF WINGS	9.4 C.Y.
TOTAL CLASS A CONCRETE		37.2 C.Y.

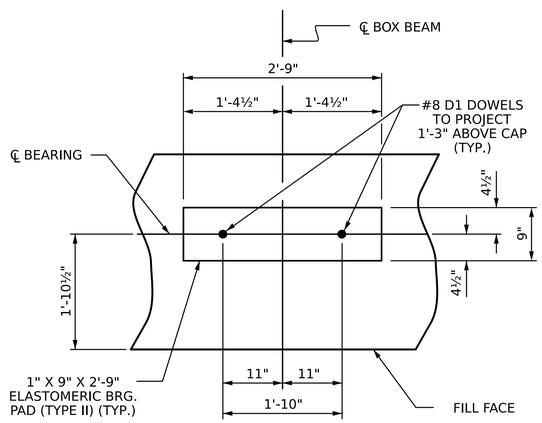

DETAIL "A''

(END BENT No. 1 SHOWN, END BENT No. 2 SIMILAR BY ROTATION)

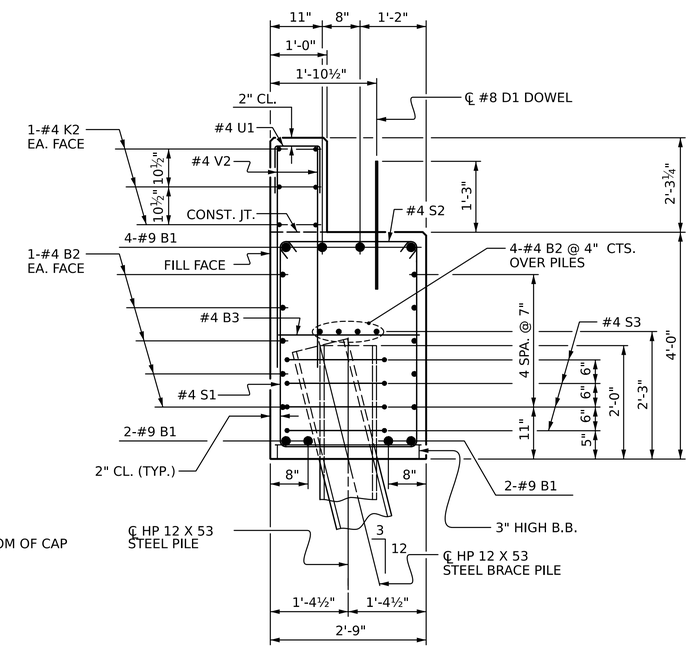

SECTION A-A

(CONCRETE COLLAR NOT SHOWN FOR CLARITY. SEE ``CORROSION PROTECTION FOR STEEL PILES DETAIL.'')

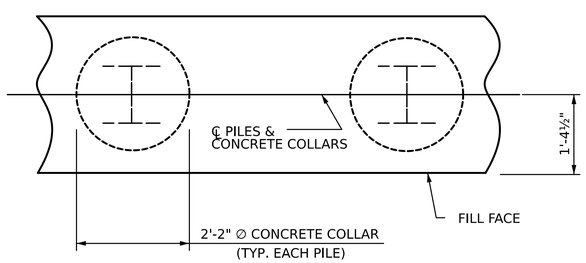

PLAN

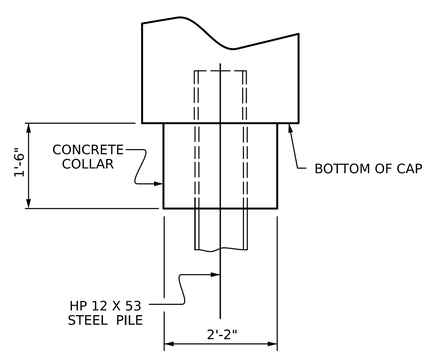

ELEVATION

CORROSION PROTECTION FOR STEEL PILES DETAIL

(END BENT No. 1 SHOWN, END BENT No. 2 SIMILAR BY ROTATION)

PROJECT NO. BP9-R002

FORSYTH COUNTY

STATION: 15+96.00 -L-

SHEET 4 OF 4

STATE OF NORTH CAROLINA
DEPARTMENT OF TRANSPORTATION
RALEIGH

SUBSTRUCTURE

END BENT No. 1 & 2 DETAILS

NORTH CAROLINA PROFESSIONAL SEAL 057121 ENGINEER LINDSEY AMELIA DIAZ
Signed by:
6/26/2026

STV Engineers, Inc.
2151 Hawkins St. Suite 1400
Charlotte, NC 28203
NC License Number F-0991

DOCUMENT NOT CONSIDERED FINAL UNLESS ALL SIGNATURES COMPLETED

REVISIONS								SHEET NO.
NO	BY:	DATE:	NO	BY:	DATE:			S-18
1			3					TOTAL SHEETS
2			4					21

DRAWN BY : FMW DATE : 4-25
CHECKED BY : LAD DATE : 7-25
DESIGN ENGINEER OF RECORD : L. DIAZ DATE : 11-25

khinm 6/26/2026 10:59:25 AM I:\Projects\4022560\4022560_000\50_Deliverables & Submittals\Structures\02 Ustation\05 RFC\40L035_BP9-R002_SMU_EB4_OI8_33026i.dgn

Docusign Envelope ID: 115861F0-3D8B-8D46-83DB-0EA8C2DB61A6

i:\Projects\4022560\4022560_0001\50_Deliverables & Submittals\Structures\02 Ustation\05 RFC\401_037_BP9-R002_SMU_RR_019_33026i.dgn 6/26/2026 10:59:26 AM khinm

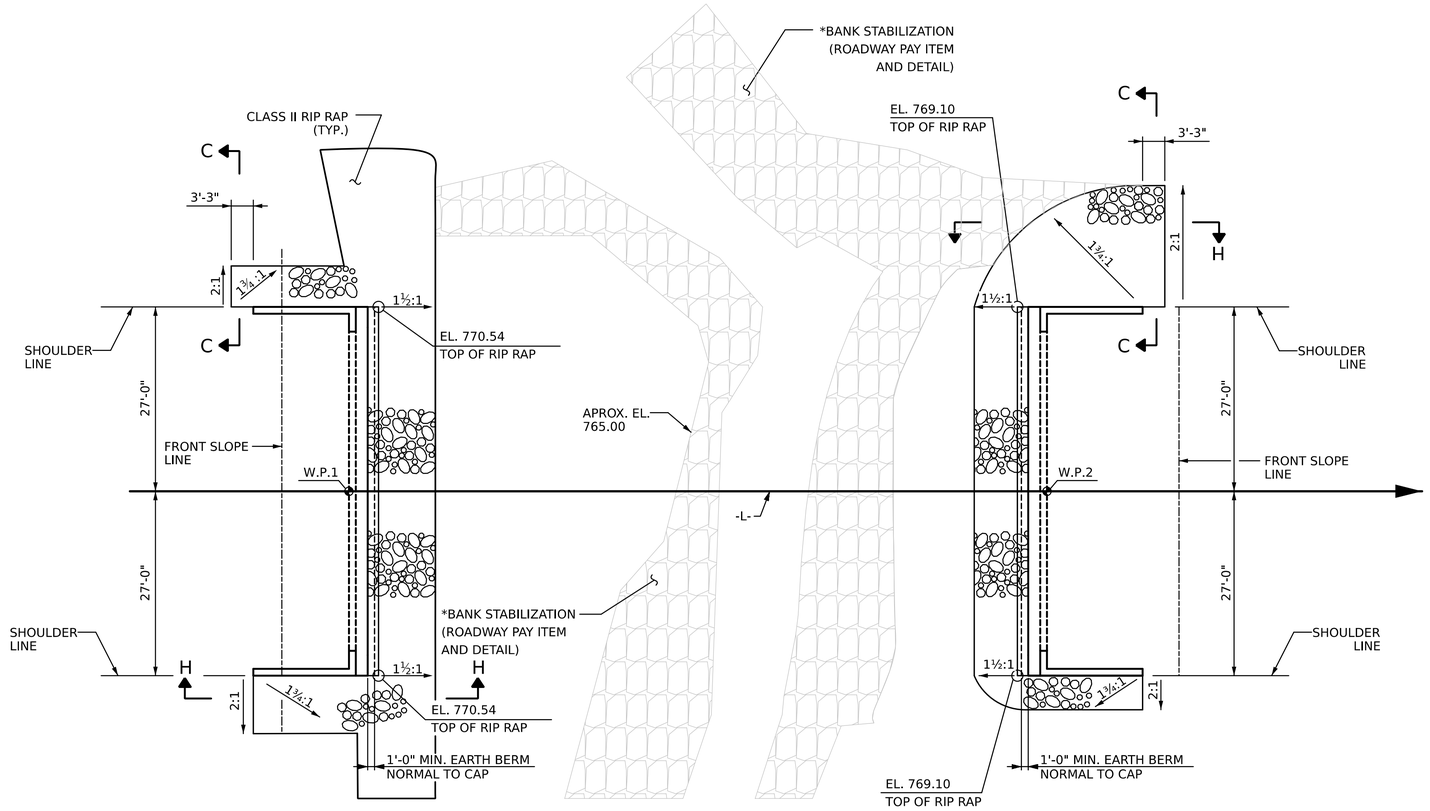

END BENT 1

END BENT 2

PLAN

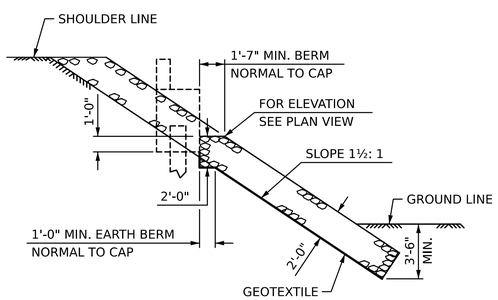

SECTION H-H

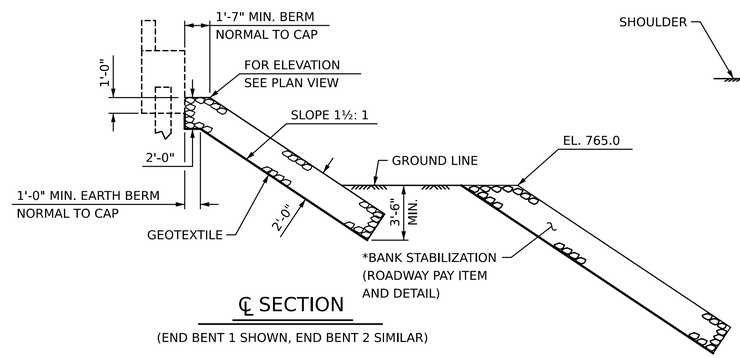

℄ SECTION

(END BENT 1 SHOWN, END BENT 2 SIMILAR)

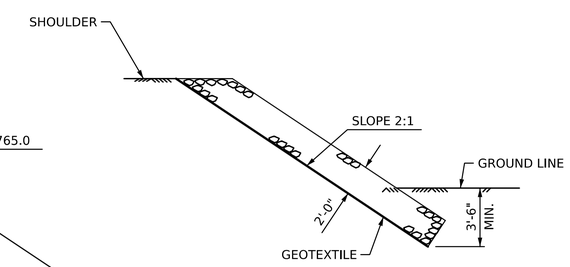

SECTION C-C

ESTIMATED QUANTITIES

BRIDGE @ STA. 15+96.00	RIP RAP CLASS II (2'-0" THICK)	GEOTEXTILE FOR DRAINAGE
	TONS	SQUARE YARDS
END BENT 1	148	165
END BENT 2	150	166

*BANK STABILIZATION (ROADWAY PAY ITEM AND DETAIL)

PROJECT NO. BP9-R002

FORSYTH COUNTY

STATION: 15+96.00 -L-

STATE OF NORTH CAROLINA
DEPARTMENT OF TRANSPORTATION
RALEIGH

RIP RAP DETAILS

NORTH CAROLINA PROFESSIONAL SEAL 057121 ENGINEER LUIS AMELIA DIAZ
Digitally signed by
6/26/2026

STV Engineers, Inc.
2151 Hawkins St. Suite 1400
Charlotte, NC 28203
NC License Number F-0991

DOCUMENT NOT CONSIDERED FINAL UNLESS ALL SIGNATURES COMPLETED

REVISIONS						SHEET NO.
NO.	BY:	DATE:	NO.	BY:	DATE:	S-19
1			3			TOTAL SHEETS
2			4			21

DRAWN BY : FMW DATE : 5-25
CHECKED BY : LAD DATE : 8-25
DESIGN ENGINEER OF RECORD : L. DIAZ DATE : 11-25

Docusign Envelope ID: 115861F0-3D8B-8D46-83DB-0EA8C2DB61A6

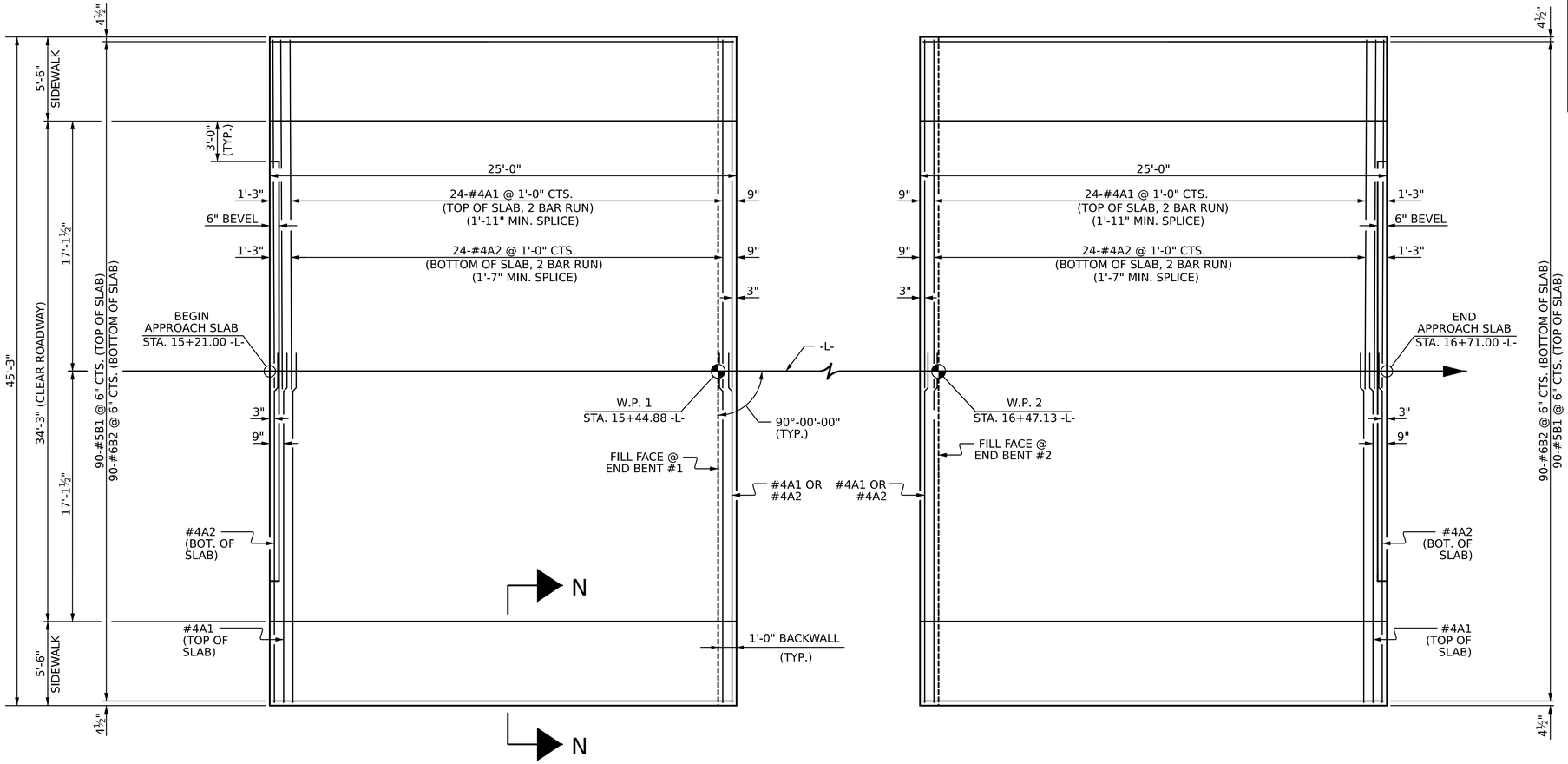

PLAN @ END BENT #1

PLAN @ END BENT #2

DIMENSIONS SHOWN ARE TYPICAL FOR BOTH APPROACH SLABS

BAR TYPE

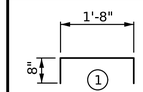

BILL OF MATERIAL

APPROACH SLAB AT EB #1

BAR	NO.	SIZE	TYPE	LENGTH	WEIGHT
* A1	52	#4	STR	23'-5"	813
A2	52	#4	STR	23'-3"	808
* B1	90	#5	STR	24'-2"	2,269
B2	90	#6	STR	24'-8"	3,334
* B3	8	#4	STR	24'-8"	132
* U1	32	#4	1	3'-0"	64
* G1	50	#4	STR	5'-0"	167
REINFORCING STEEL				LBS.	4,142
* EPOXY COATED REINFORCING STEEL				LBS.	3,445
CLASS AA CONCRETE				C. Y.	49.2

APPROACH SLAB AT EB #2

BAR	NO.	SIZE	TYPE	LENGTH	WEIGHT
* A1	52	#4	STR	23'-5"	813
A2	52	#4	STR	23'-3"	808
* B1	90	#5	STR	24'-2"	2,269
B2	90	#6	STR	24'-8"	3,334
* B3	8	#4	STR	24'-8"	132
* U1	32	#4	1	3'-0"	64
* G1	50	#4	STR	5'-0"	167
REINFORCING STEEL				LBS.	4,142
* EPOXY COATED REINFORCING STEEL				LBS.	3,445
CLASS AA CONCRETE				C. Y.	49.2

SPLICE LENGTHS

BAR SIZE	EPOXY COATED	UNCOATED
#4	1'-11"	1'-7"
#5	2'-5"	2'-0"
#6	3'-7"	2'-5"

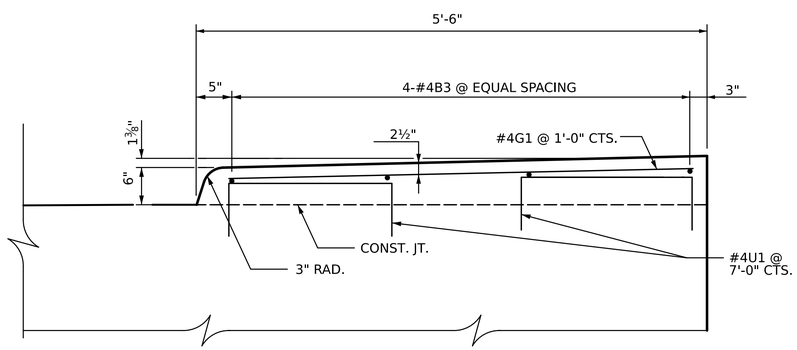

SECTION N-N

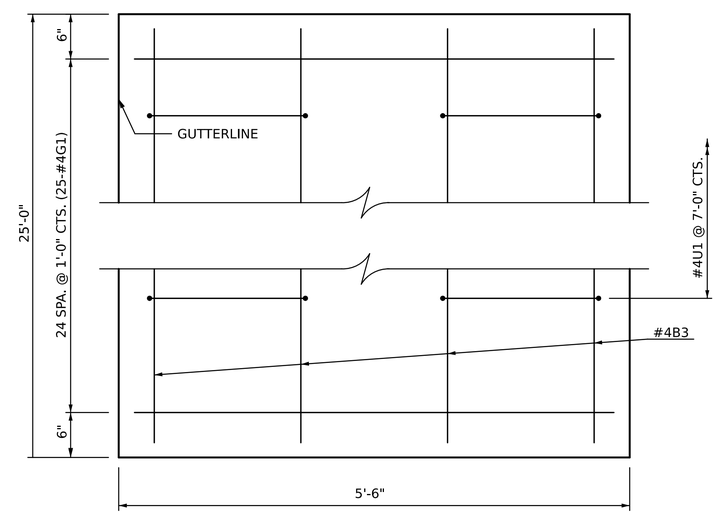

SIDEWALK PLAN

PROJECT NO. BP9-R002

FORSYTH COUNTY

STATION: 15+96.00 -L-

SHEET 1 OF 2

STATE OF NORTH CAROLINA
DEPARTMENT OF TRANSPORTATION
RALEIGH

BRIDGE APPROACH SLAB
FOR PRESTRESSED CONCRETE
BOX BEAM UNIT
90° SKEW

NORTH CAROLINA PROFESSIONAL SEAL 057121 ENGINEER LUIS AMELIA DIAZ
Signed by:
6/26/2026

STV Engineers, Inc.
2151 Hawkins St. Suite 1400
Charlotte, NC 28203
NC License Number F-0991

DOCUMENT NOT CONSIDERED FINAL UNLESS ALL SIGNATURES COMPLETED

REVISIONS						SHEET NO.
NO	BY:	DATE:	NO	BY:	DATE:	S-20
1			3			TOTAL SHEETS
2			4			21

DRAWN BY :	FMW	DATE :	5-25
CHECKED BY :	LAD	DATE :	8-25
DESIGN ENGINEER OF RECORD :	L. DIAZ	DATE :	11-25

khlnm 6/26/2026 10:59:26 AM I:\Projects\4022560\4022560_0001\50_Deliverables & Submittals\Structures\02 Ustation\05 RFC\40L039_BP9-R002_SMU_AS_020_33026i.dgn

Docusign Envelope ID: 115861F0-3D8B-8D46-83DB-0EA8C2DB61A6

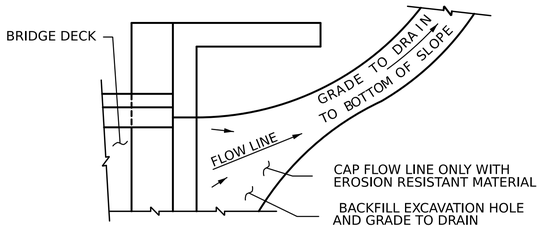

NOTE: IF THE APPROACH SLAB IS NOT CONSTRUCTED IMMEDIATELY AFTER THE BACKFILLING OF THE END BENT EXCAVATION, GRADE TO DRAIN TO THE BOTTOM OF THE SLOPE AND PROVIDE EROSION RESISTANT MATERIAL, SUCH AS FIBERGLASS ROVING OR AS DIRECTED BY THE ENGINEER TO PREVENT SOIL EROSION AND TO PROTECT THE AREA ADJACENT TO THE STRUCTURE. THE CONTRACTOR WILL BE REQUIRED TO REMOVE THESE MATERIALS PRIOR TO CONSTRUCTION OF THE APPROACH SLAB.

TEMPORARY DRAINAGE DETAIL

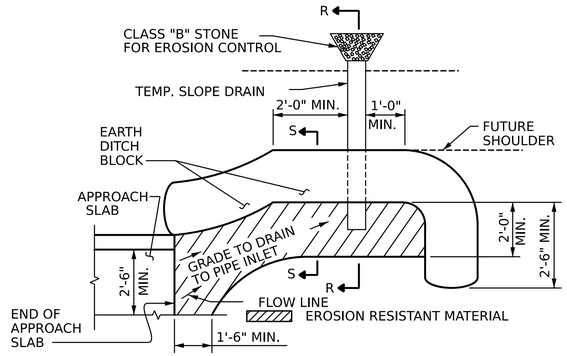

NOTE: IMMEDIATELY AFTER THE CONSTRUCTION OF THE APPROACH SLAB, THE CONTRACTOR SHALL PROVIDE TEMPORARY BERM AND SLOPE DRAIN. CONTRACTOR SHALL GRADE TO PIPE INLET AND PROVIDE EROSION RESISTANT MATERIAL AS SHOWN. THE EROSION RESISTANT MATERIAL SHALL BE EITHER 1) ASPHALT PLANT MIX, TYPE 1 OR TYPE 2, MIN. 2" DEPTH, 2) EROSION CONTROL MAT, OR 3) CONCRETE, AS DIRECTED BY THE ENGINEER. THE SLOPE DRAIN SHALL CONSIST OF A NON-PERFORATED TEMPORARY DRAINAGE PIPE, 12 INCHES IN DIAMETER.

PLAN VIEW

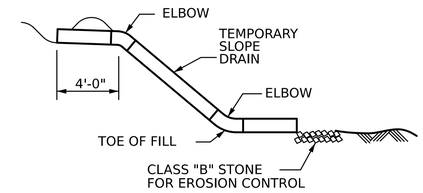

SECTION R-R

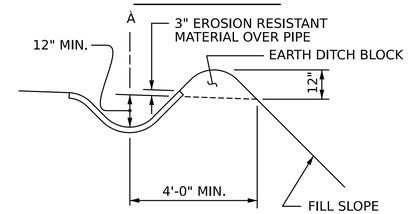

SECTION S-S

NOTES

FOR BRIDGE APPROACH FILL, SEE ROADWAY PLANS.

AREA BETWEEN THE WINGWALL AND APPROACH SLAB SHALL BE GRADED TO DRAIN THE WATER AWAY FROM THE FILL FACE OF THE BRIDGE AND SHALL BE PAVED. SEE ROADWAY PLANS.

APPROACH SLAB SHALL BE POURED AFTER CONCRETE WEARING SURFACE IS POURED.

THE JOINT OPENING AT THE APPROACH SLAB/CONCRETE WEARING SURFACE INTERFACE SHALL BE SAWED NO MORE THAN 12 HOURS AFTER THE APPROACH SLAB IS CAST. THE JOINT SHALL BE CLEANED OF ALL DEBRIS BEFORE THE SEALANT IS APPLIED. THE JOINT SEALER MATERIAL SHALL CONFORM TO THE REQUIREMENTS OF SECTION 1028-03 OF THE STANDARD SPECIFICATIONS.

TEMPORARY BERM AND SLOPE DRAIN DETAILS

(TO BE USED WHEN SHOULDER BERM GUTTER IS REQUIRED)

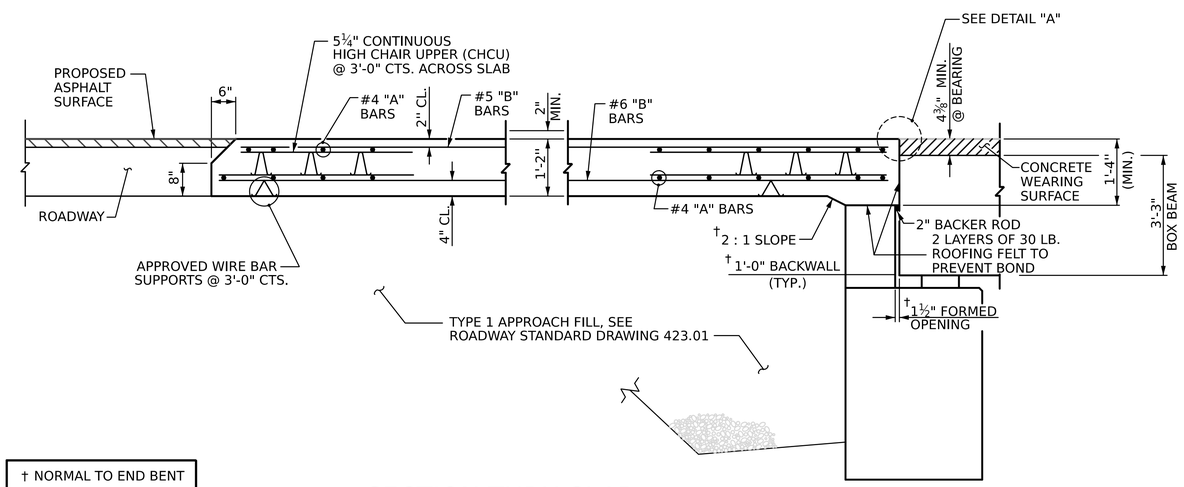

† NORMAL TO END BENT

SECTION THRU SLAB

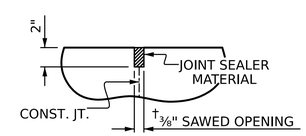

DETAIL "A"

PROJECT NO. BP9-R002

FORSYTH COUNTY

STATION: 15+96.00 -L-

SHEET 2 OF 2

STATE OF NORTH CAROLINA
DEPARTMENT OF TRANSPORTATION
RALEIGH

BRIDGE APPROACH SLAB DETAILS

NORTH CAROLINA PROFESSIONAL SEAL 057121 ENGINEER LUIS AMELIA DIAZ
Signed by:
6/26/2026

STV Engineers, Inc.
2151 Hawkins St. Suite 1400
Charlotte, NC 28203
NC License Number F-0991

DOCUMENT NOT CONSIDERED FINAL UNLESS ALL SIGNATURES COMPLETED

REVISIONS						SHEET NO.
NO	BY:	DATE:	NO	BY:	DATE:	S-21
1			3			TOTAL SHEETS
2			4			21

DRAWN BY : FMW DATE : 5-25
CHECKED BY : LAD DATE : 8-25
DESIGN ENGINEER OF RECORD : L. DIAZ DATE : 11-25

khinm 6/26/2026 10:59:27 AM I:\Projects\4022560\4022560_000\50_Deliverables & Submittals\Structures\02 Ustation\05 RFC\40L04LBP9-R002_SMU_AS2_02L_330261.dgn

Docusign Envelope ID: 115861F0-3D8B-8D46-83DB-0EA8C2DB61A6

STANDARD NOTES

DESIGN DATA:

SPECIFICATIONS	AASHTO (CURRENT)
LIVE LOAD	SEE PLANS
IMPACT ALLOWANCE	SEE AASHTO
STRESS IN EXTREME FIBER OF STRUCTURAL STEEL - AASHTO M270 GRADE 36	20,000 LBS. PER SQ. IN.
- AASHTO M270 GRADE 50W	27,000 LBS. PER SQ. IN.
- AASHTO M270 GRADE 50	27,000 LBS. PER SQ. IN.
REINFORCING STEEL IN TENSION - GRADE 60	24,000 LBS. PER SQ. IN.
CONCRETE IN COMPRESSION	1,200 LBS. PER SQ. IN.
CONCRETE IN SHEAR	SEE AASHTO
STRUCTURAL TIMBER - TREATED OR UNTREATED EXTREME FIBER STRESS	1,800 LBS. PER SQ. IN.
COMPRESSION PERPENDICULAR TO GRAIN OF TIMBER	375 LBS. PER SQ. IN.
EQUIVALENT FLUID PRESSURE OF EARTH	30 LBS. PER CU. FT. (MINIMUM)

MATERIAL AND WORKMANSHIP:

EXCEPT AS MAY OTHERWISE BE SPECIFIED ON PLANS OR IN THE SPECIAL PROVISIONS, ALL MATERIAL AND WORKMANSHIP SHALL BE IN ACCORDANCE WITH THE 2024 "STANDARD SPECIFICATIONS FOR ROADS AND STRUCTURES" OF THE N. C. DEPARTMENT OF TRANSPORTATION.

STEEL SHEET PILING FOR PERMANENT OR TEMPORARY APPLICATIONS SHALL BE HOT ROLLED.

CONCRETE:

UNLESS OTHERWISE REQUIRED ON PLANS, CLASS A CONCRETE SHALL BE USED FOR ALL PORTIONS OF ALL STRUCTURES WITH THE EXCEPTION THAT: CLASS AA CONCRETE SHALL BE USED IN BRIDGE SUPERSTRUCTURES, ABUTMENT BACKWALLS, AND APPROACH SLABS; AND CLASS B CONCRETE SHALL BE USED FOR SLOPE PROTECTION AND RIP RAP.

CONCRETE CHAMFERS:

UNLESS OTHERWISE NOTED ON THE PLANS, ALL EXPOSED CORNERS ON STRUCTURES SHALL BE CHAMFERED ¾" WITH THE FOLLOWING EXCEPTIONS: TOP CORNERS OF CURBS MAY BE ROUNDED TO 1½" RADIUS WHICH IS BUILT INTO CURB FORMS; CORNERS OF TRANSVERSE FLOOR EXPANSION JOINTS SHALL BE ROUNDED WITH A ¼" FINISHING TOOL UNLESS OTHERWISE REQUIRED ON PLANS; AND CORNERS OF EXPANSION JOINTS IN THE ROADWAY FACES AND TOPS OF CURBS AND SIDEWALKS SHALL BE ROUNDED TO A ¼" RADIUS WITH A FINISHING STONE OR TOOL UNLESS OTHERWISE REQUIRED ON PLANS.

DOWELS:

DOWELS WHEN INDICATED ON PLANS AS FOR CULVERT EXTENSIONS, SHALL BE EMBEDDED AT LEAST 12" INTO THE OLD CONCRETE AND GROUTED INTO PLACE WITH 1:2 CEMENT MORTAR.

ALLOWANCE FOR DEAD LOAD DEFLECTION, SETTLEMENT, ETC. IN CASTING SUPERSTRUCTURES:

BRIDGES SHALL BE BUILT ON THE GRADE OR VERTICAL CURVE SHOWN ON PLANS. SLABS, CURBS AND PARAPETS SHALL CONFORM TO THE GRADE OR CURVE.

ALL DIMENSIONS WHICH ARE GIVEN IN SECTION AND ARE AFFECTED BY DEAD LOAD DEFLECTIONS ARE DIMENSIONS AT CENTER LINE OF BEARING UNLESS OTHERWISE NOTED ON PLANS. IN SETTING FORMS FOR STEEL BEAM BRIDGES AND PRESTRESSED CONCRETE GIRDER BRIDGES, ADJUSTMENTS SHALL BE MADE DUE TO THE DEAD LOAD DEFLECTIONS FOR THE ELEVATIONS SHOWN. WHERE BLOCKS ARE SHOWN OVER BEAMS FOR BUILDING UP TO THE SLAB, THE VERTICAL DIMENSIONS OF THE BLOCKS SHALL BE ADJUSTED BETWEEN BEARINGS TO COMPENSATE FOR DEAD LOAD DEFLECTIONS, VERTICAL CURVE ORDINATE, AND ACTUAL BEAM CAMBER. WHERE BOTTOM OF SLAB IS IN LINE WITH BOTTOM OF TOP FLANGES, DEPTH OF SLAB BETWEEN BEARINGS SHALL BE ADJUSTED TO COMPENSATE FOR DEAD LOAD DEFLECTION, VERTICAL CURVE ORDINATE, AND ACTUAL BEAM CAMBER.

IN SETTING FALSEWORK AND FORMS FOR REINFORCED CONCRETE SPANS, AN ALLOWANCE SHALL BE MADE FOR DEAD LOAD DEFLECTIONS, SETTLEMENT OF FALSEWORK, AND PERMANENT CAMBER WHICH SHALL BE PROVIDED FOR IN ADDITION TO THE ELEVATIONS SHOWN. AFTER REMOVAL OF THE FALSEWORK, THE FINISHED STRUCTURES SHALL CONFORM TO THE PROFILE AND ELEVATIONS SHOWN ON THE PLANS AND CONSTRUCTION ELEVATIONS FURNISHED BY THE ENGINEER.

DETAILED DRAWINGS FOR FALSEWORK OR FORMS FOR BRIDGE SUPERSTRUCTURE AND ANY STRUCTURE OR PARTS OF A STRUCTURE AS NOTED ON THE PLANS SHALL BE SUBMITTED TO THE ENGINEER FOR APPROVAL BEFORE CONSTRUCTION OF THE FALSEWORK OR FORMS IS STARTED.

REINFORCING STEEL:

ALL REINFORCING STEEL SHALL BE DEFORMED. DIMENSIONS RELATIVE TO PLACEMENT OF REINFORCING ARE TO CENTERS OF BARS UNLESS OTHERWISE INDICATED IN THE PLANS. DIMENSIONS ON BAR DETAILS ARE TO CENTERS OF BARS OR ARE OUT TO OUT AS INDICATED ON PLANS.

WIRE BAR SUPPORTS SHALL BE PROVIDED FOR REINFORCING STEEL WHERE INDICATED ON THE PLANS. WHEN BAR SUPPORT PIECES ARE PLACED IN CONTINUOUS LINES, THEY SHALL BE SO PLACED THAT THE ENDS OF THE SUPPORTING WIRES SHALL BE LAPPED TO LOCK LEGS ON ADJOINING PIECES.

STRUCTURAL STEEL:

AT THE CONTRACTOR'S OPTION, HE MAY SUBSTITUTE ⅞" ∅ SHEAR STUDS FOR THE ¾" ∅ STUDS SPECIFIED ON THE PLANS. THIS SUBSTITUTION SHALL BE MADE AT THE RATE OF 3 - ⅞" ∅ STUDS FOR 4 - ¾" ∅ STUDS, AND STUD SPACING CHANGES SHALL BE MADE AS NECESSARY TO PROVIDE THE SAME EQUIVALENT NUMBER OF ⅞" ∅ STUDS ALONG THE BEAM AS SHOWN FOR ¾" ∅ STUDS BASED ON THE RATIO OF 3 - ⅞"∅ STUDS FOR 4 - ¾" ∅ STUDS. STUDS OF THE LENGTH SPECIFIED ON THE PLANS MUST BE PROVIDED. THE MAXIMUM SPACING SHALL BE 2'-0".

EXCEPT AT THE INTERIOR SUPPORTS OF CONTINUOUS BEAMS WHERE THE COVER PLATE IS IN CONTACT WITH BEARING PLATE, THE CONTRACTOR MAY, AT HIS OPTION, SUBSTITUTE FOR THE COVER PLATES DESIGNATED ON THE PLANS COVER PLATES OF THE EQUIVALENT AREA PROVIDED THESE PLATES ARE AT LEAST 5/16" IN THICKNESS AND DO NOT EXCEED A WIDTH EQUAL TO THE FLANGE WIDTH LESS 2" OR A THICKNESS EQUAL TO 2 TIMES THE FLANGE THICKNESS. THE SIZE OF FILLET WELDS SHALL CONFORM TO THE REQUIREMENTS OF THE CURRENT ANSI/AASHTO/AWS "BRIDGE WELDING CODE". ELECTROSLAG WELDING WILL NOT BE PERMITTED.

WITH THE SOLE EXCEPTION OF EDGES AT SURFACES WHICH BEAR ON OTHER SURFACES, ALL SHARP EDGES AND ENDS OF SHAPES AND PLATES SHALL BE SLIGHTLY ROUNDED BY SUITABLE MEANS TO A RADIUS OF APPROXIMATELY 1/16" OR EQUIVALENT FLAT SURFACE AT A SUITABLE ANGLE PRIOR TO PAINTING, GALVANIZING, OR METALLIZING.

HANDRAILS AND POSTS:

METAL STANDARDS AND FACES OF THE CONCRETE END POSTS FOR THE METAL RAIL SHALL BE SET NORMAL TO THE GRADE OF THE CURB, UNLESS OTHERWISE SHOWN ON PLANS. THE METAL RAIL AND TOPS OF CONCRETE POSTS USED WITH THE ALUMINUM RAIL SHALL BE BUILT PARALLEL TO THE GRADE OF THE CURB.

METAL HANDRAILS SHALL BE IN ACCORDANCE WITH THE PLANS. RAILS SHALL BE AS MANUFACTURED FOR BRIDGE RAILING. CASTINGS SHALL BE OF A UNIFORM APPEARANCE. FINS AND OTHER DEFORMATIONS RESULTING FROM CASTING OR OTHERWISE SHALL BE REMOVED IN A MANNER SO THAT A UNIFORM COLORING OF THE COMPLETED CASTING SHALL BE OBTAINED. CASTINGS WITH DISCOLORATIONS OR OF NON-UNIFORM COLORING WILL NOT BE ACCEPTED. CERTIFIED MILL REPORTS ARE REQUIRED FOR METAL RAILS AND POSTS.

SPECIAL NOTES:

GENERALLY, IN CASE OF DISCREPANCY, THIS STANDARD SHEET OF NOTES SHALL GOVERN OVER THE SPECIFICATIONS, BUT THE REMAINDER OF THE PLANS SHALL GOVERN OVER NOTES HEREON, AND SPECIAL PROVISIONS SHALL GOVERN OVER ALL. SEE SPECIFICATIONS ARTICLE 105-4.